COLLINGWOOD GENERAL & MARINE HOSPITAL (CGMH)

NEW NUCLEAR MEDICINE SPECT/CT SUITE - INTERIOR ALTERATION

ABBREVIATIONS

ACT	ACOUSTIC CEILING TILE	NIC	NOT IN CONTRACT
AFF	ABOVE FINISHED FLOOR	NOM	NOMINAL
AL	ALUMINUM	NTS	NOT TO SCALE
ARCH	ARCHITECTURE	OBC	2012 ONTARIO BUILDING CODE
BLK	BLOCK	OC	ON CENTER
BLKD	BULKHEAD	O/H	OVERHEAD
CB	CATCH BASIN	OHSA	ONTARIO OCCUPATIONAL HEALTH & SAFETY ACT
CG	CORNER GUARD		
CLG	CEILING	OPR	OPERATOR
CLR	CLEAR	OWSJ	OPEN WEB STEEL JOIST
COL	COLUMN	PT	PAINT
C/W	COMPLETE WITH	PLAM	PLASTIC LAMINATE
CONC	CONCRETE	PL	PLATE
CJ	CONSTRUCTION JOINT	PLY	PLYWOOD
CONT	CONTINUOUS	PVC	POLYVINYL CHLORIDE
DP	DEEP	PCT	PORCELAIN CERAMIC TILE
DIA	DIAMETER	PCC	PRECAST CONCRETE
DIM	DIMENSION	RCP	REFLECTED CEILING PLAN
DR	DOOR	PRFL	PROFILE
DWG(S)	DRAWING(S)	R	RADIUS
EA	EACH	RCPT	RECEPTACLE
ELEC	ELECTRICAL	REF	REFER TO
EQ	EQUAL	REQD	REQUIRED
EXP JT	EXPANSION JOINT	RQMT(S)	REQUIREMENT(S)
EXT	EXTERIOR	RM	ROOM
FIN	FINISH	RD	ROOF DRAIN
FRR	FIRE RESISTANCE RATING/ RATED	RO	ROUGH OPENING
FL	FLOOR	RWL	RAINWATER LEADER
FD	FLOOR DRAIN	SECT	SECTION
FTG	FOOTING	SL	SLIDING
FDN	FOUNDATION	STC	SOUND TRANSMISSION CLASS
GA	GAUGE	SPEC	SPECIFICATION
GALV	GALVANIZED	SS	STAINLESS STEEL
GL	GLASS	STD	STANDARD
GF	GROUND FLOOR	STL	STEEL
GWB	GYPSUM WALL BOARD	STL PL	STEEL PLATE
HDW	HARDWARE	STR	STRUCTURE/ STRUCTURAL
HT	HEIGHT	TEL	TELEPHONE
HC	HOLLOW CORE	THK	THICK
HM	HOLLOW METAL	THR	THRESHOLD
HOR	HORIZONTAL	TOS	TOP OF SLAB (ELEVATION)
HYD	HYDRANT	TYP	TYPICAL
INS	INSULATION	U/G	UNDERGROUND
JT	JOINT	U/S	UNDERSIDE
LS	LIGHT STANDARD	UOS	UNLESS OTHERWISE SPECIFIED
MAX	MAXIMUM	VERT	VERTICAL
MECH	MECHANICAL	VIF	VERIFY IN FIELD
MET	METAL	WR	WASHROOM
MIN	MINIMUM	WC	WATER CLOSET
MPa	MEGAPASCAL	WP	WATERPROOFING
MWP	MEMBRANE WATERPROOFING	WD	WOOD

8 A-001 ABBREVIATIONS
SCALE: NTS

GENERAL NOTES:

1. THE CONTRACTOR SHALL PHASE THE WORK SUCH THAT THE AREAS LABELLED 'EXISTING OFFICE' AND 'EXISTING MEETING ROOM' ARE REINSTATED TO FULL FUNCTIONALITY AT THE EARLIEST POSSIBLE DATE. THESE SPACES SHALL BE TURNED OVER WITH COMPLETE FINISHES, OPERATIONAL ELECTRICAL AND MECHANICLA SYSTEMS, AND ALL CONSTRUCTION ACTIVITIES ASSOCIATED WITH THE DEMISING WALL DEMOLITION/RECONSTRUCTION SUBSTANTIALLY COMPLETE. THE CONTRACTOR SHALL COORDINATE REQUIRED SEQUENCING WITH THE OWNER AND ACCOUNT FOR ALL ASSOCIATED COSTS IN THEIR BID.
2. DO NOT SCALE DRAWINGS. RELY ON THE NUMERIC DIMENSIONS SHOWN ON THE DRAWINGS FOR MEASUREMENT.
3. PARTITIONS ARE DIMENSIONED TO FACE OF PARTITION UNLESS OTHERWISE INDICATED.
4. SEE WALL TYPES SCHEDULE FOR PARTITION THICKNESSES.
5. PROVIDE BLOCKING FOR ALL SURFACE MOUNTED ACCESSORIES AND FIXTURES.
6. WHERE EXISTING SURFACES TO REMAIN ARE DISTURBED BY THE REMOVAL OF EXISTING WORK OR THE INSTALLATION OF NEW WORK, MAKE GOOD ALL SURFACES TO MATCH ADJACENT EXISTING SURFACES. REPAINT EXISTING PAINTED SURFACES COMPLETE TO THE NEAREST CHANGES IN PLANE.
7. REFER TO SPECIFICATIONS FOR SHUT-DOWN PROCEDURES, PROVIDE ADVANCE NOTICE AS REQUIRED.
8. REFER TO SPECIFICATIONS FOR REQUIREMENTS. PROVIDE ALL REQUIRED SHOP DRAWINGS.
9. CONTRACTOR TO FULLY ASSESS EXISTING CONDITIONS AT TIME OF BID.
10. REFER TO RFP FRONT END DOCUMENT TABLE OF DATES AND DURATIONS FOR PROJECT MILESTONE REQUIREMENTS AND KEY DATES.
11. REFER TO CASH ALLOWANCE #1 DESCRIPTION OF SERVICES, AND REFER TO CEILING LIFT DRAWINGS APPENDED TO SPECIFICATIONS.

7 A-001 GENERAL NOTES
SCALE: NTS

BUILDING CODE REVIEW

PROJECT NAME: CGMH - NEW NUCLEAR MEDICINE SPECT/CT SUITE
LOCATION: CGMH - 459 HUME ST., COLLINGWOOD ON, L9Y 3W9

PROJECT DESCRIPTION:
INTERIOR ALTERATIONS TO AN EXISTING B1 LEVEL CGMH FOUNDATION OFFICE TO CONVERT TO NEW SPECT/CT SUITE, COMPLETE WITH SPECT/CT SCANNER, CONTROL ROOM, PATIENT PREP, NUCLEAR SUBSTANCES DISPENSING ROOM, HOT WAITING, BARRIER FREE WASHROOM AND CHANGE ROOM. FURTHER INTERIOR ALTERATIONS INCLUDE COLD WAITING AREA AND BONE MINERAL DENSITY ROOM. BONE MINERAL DENSITY IS AN EXISTING SERVICE TO BE RELOCATED.

BACKGROUND:
- MAJOR OCCUPANCY - EXISTING: GROUP B, DIVISION 2 - NO CHANGE PROPOSED
- BUILDING AREA - EXISTING: NO CHANGE PROPOSED
- AREA OF CONSTRUCTION - 130m²
- TYPE OF CONSTRUCTION - EXISTING: NON-COMBUSTIBLE - NO CHANGE PROPOSED
- SPRINKLERS & ALARMS: MODIFICATIONS TO SUIT NEW SUITE LAYOUT ARE PROPOSED

APPLICABLE PARTS:
- PART 3
- PART 11

6 A-001 BUILDING CODE REVIEW
SCALE: NTS

DRAWING LIST

DWG NO.	TITLE
A-001	DWG LIST, OBC MATRIX, BLDG CODE REVIEW, LOCATION PLAN, SYMBOLS LEGEND, GENERAL NOTES, ABBREVIATIONS
A-002	TRAVEL DISTANCE & FIRE SEPARATION PLAN
A-003	FINISHES AND ASSEMBLIES SCHEDULES
A-004	DOOR, HARDWARE AND ACCESSORIES SCHEDULES
A-005	INTERIOR SCREEN SCHEDULE
A-101	DEMO FLOOR PLAN - LEVEL B1
A-102	DEMO RCP - LEVEL B1
A-201	PROPOSED FLOOR PLAN - LEVEL B1
A-202	PROPOSED RCP - LEVEL B1
A-301	PROPOSED SECTION AND ELEVATION
A-501	PROPOSED MILLWORK DETAILS
A-502	PROPOSED MILLWORK DETAILS
A-503	PROPOSED MILLWORK DETAILS
A-601	PROPOSED WASHROOM DETAILS
S-001	GENERAL NOTES & TYPICAL DETAILS
S-100	SITE PLAN
S-200	LEVEL B1 & LEVEL 1 FLOOR PLAN
M-001	KEY PLAN LEGENDS AND NOTES
M-200	MECHANICAL BELOW GRADE PLUMBING PLAN - DEMOLITION
M-201	MECHANICAL PLUMBING PLAN - DEMOLITION
M-202	MECHANICAL BELOW GRADE PLUMBING PLAN - NEW WORK
M-203	MECHANICAL PLUMBING PLAN - NEW WORK
M-300	MECHANICAL HVAC & FIRE PROTECTION PLAN - DEMOLITION
M-301	MECHANICAL HVAC & FIRE PROTECTION PLAN - NEW WORK
M-400	MECHANICAL DETAILS I
M-401	MECHANICAL DETAILS II
M-500	MECHANICAL SCHEDULES
E-001	ELECTRICAL LEGEND & DRAWING LIST
E-100	ELECTRICAL KEY PLAN
E-201	LIGHTING DEMOLITION WORK
E-202	LIGHTING NEW WORK
E-301	POWER & SYSTEM DEMOLITION
E-302	POWER & SYSTEM NEW WORK
E-700	ELECTRICAL SINGLE LINE DIAGRAM
E-800	ELEC DETAILS 1 OF 3
E-801	ELEC DETAILS 2 OF 3
E-802	ELEC DETAILS 3 OF 3
E-900	ELECTRICAL SCHEDULES
E-901	ELECTRICAL PANEL SCHEDULE - DEMO
E-902	ELECTRICAL PANEL SCHEDULE - NEW

5 A-001 DRAWING LIST
SCALE: NTS

OBC MATRIX

Name of Practice: David Carter Architects Inc.
Certificate of Practice Number: 5207
688 Richmond St W, Suite 303, Toronto, Ontario, M6J 1C5
T: 416.977.6300

Name of Project: Collingwood General and Marine Hospital
Nuclear Medicine SPECT/CT Suite

Location: 459 Hume Street, Collingwood, ON, L9Y 3W9

Item	Ontario Building Code Data Matrix Parts 3 or 9		Building Code Reference: References are to Division B unless noted [A] for Division A or [C] for Division C.	
		☑ Part 11	☑ Part 3	☐ Part 9
1	Project Type: ☐ New ☑ Alteration ☐ Addition ☐ Change of Use	11.1 to 11.5	1.3.3.2.[A]	1.3.3.3.[A]
2	Major Occupancy(s): CARE & TREATMENT - GROUP B, DIVISION 2		3.1.2.	9.10.2.
3	Superimposed Major Occupancies: ☑ No ☐ Yes Description _____		3.2.2.7.	9.10.2.3
4	Building Area (m²): Existing: 4,285 New: 0 Total: NO CHANGE		1.4.1.2.[A]	1.4.1.2.[A]
5	Gross Area (m²): Existing: 11,790 New: 0 Total: 11,790		1.4.1.2.[A]	1.4.1.2.[A]
6	Mezzanine(s) Area (m²): N/A		3.2.1.1.	9.10.4.1.
7	Building Height: Storeys above grade: 2 Storeys below grade: 1		1.4.1.2.[A], 3.2.1.1.	1.4.1.2.[A] & 9.10.4
8	High Building: ☐ Yes ☑ No		3.2.6.	N/A
9	Number of Streets/ Fire Fighter Access: 2		3.2.2.10. & 3.2.5.	9.10.20.
10	Building Classification: 3.2.2.38 - Group B, Division 2, Any Height Any Area, Sprinklered		3.2.2.20. - 93.	9.10.2.
11	Sprinkler System Proposed: ☑ Entire building ☐ Selected compartments ☐ Selected floor areas Existing Building is Sprinklered ☐ Basement ☐ In lieu of roof rating ☐ Not required		3.2.1.5. & 3.2.2.18., .21., .22., .29., 3.2.4.1., 3.2.4.9., 3.2.4.15., and 3.2.5.12. to .14.	9.10.8.2. - 4. 3.2.4.7.(4) Index
12	Standpipe required: ☑ Yes ☐ No		3.2.5.8. - .11.	N/A
13	Fire Alarm required: ☑ Yes ☐ No Type Provided: ☑ Single stage ☐ Two Stage ☐ None		3.2.4.	9.10.18.
14	Water Service/ Supply is Adequate: ☑ Yes ☐ No		3.2.5.7.	9.31.3.
15	Construction Restrictions: ☐ Combustible permitted ☑ Non-combustible required ☐ Enapsulated mass timber permitted Actual Construction: ☐ Combustible ☑ Non-combustible ☐ Combination of combustible and non-combustible ☐ Encapsulated mass timber ☐ Combination of encapsulated mass timber and non-combustible Heavy Timber Construction: ☑ No ☐ Yes		3.2.2.20 - 93. & 3.1.6. 3.1.4.6., 7., 3.2.2.16.	9.10.6. 3.1.5., and 3.1.4.7.
16	Importance Category: ☐ Low ☐ Normal ☐ High ☑ Post-disaster		4.1.2.1.(3) & T4.1.2.1.	
17	Seismic Category: Seismic Category: Existing Site Class: Existing Seismic design for Table 4.1.8.18, items 6 to 22 ☑ Required ☐ Not Required Reasons:		4.1.8.4 (1) T-4.1.8.5.-B 4.1.8.18.	
18	Occupant load based on: ☐ m²/ person ☑ design of building No Change		3.1.17.	9.9.1.3. Table 3.1.17.1.
19	Barrier-free Design: ☑ Yes ☐ No (explain) _____		3.8.	9.5.2.
20	Hazardous Substances: ☐ Yes ☑ No		3.3.1.2.	9.10.1.3.
21	Required Fire Resistance Rating (FRR)		3.2.2.20. - 93. 3.2.1.2. 3.2.1.4. 3.2.2.15. 3.3.2.1.	9.10.8. and 9.10.11.

Required Fire Resistance Rating (FRR)	
Horizontal Assemblies FRR (hours)	Listed Design no. or Description (SG-2)
Floors: 1 hours	Existing Unchanged
Roof: N/A hours	N/A
Mezzanine: N/A	N/A
FRR of Supporting Members	Listed Design no. or Description (SG-2)
Floors: 1 hours	Existing Unchanged
Roof: N/A hours	N/A
Mezzanine: N/A	N/A

Ontario 2024 Building Code Data Matrix- Division B, Part 11 - Renovation of Existing Building					OBC Reference
11.1	Existing Building Classification:	Describe Existing Use: Group B2 Construction Index: NA Hazard Index: NA ☒ Not Applicable (No Change in Major Occupancy)			11.2.1 T 11.2.1.1A T 11.2.1.1J
11.2	Alterations to Existing Building:	Basic Renovation ☒ Extensive Renovation ☐			11.3.3.1 11.3.3.2
11.3	Reduction in Performance Level:	Structural:	☒ NO	☐ YES	11.4.2
		By Increase in Occupant Load:	☒ NO	☐ YES	11.4.2.1
		By Change of Major Occupancy:	☒ NO	☐ YES	11.4.2.2
		Plumbing:	☒ NO	☐ YES	11.4.2.3
		Sewage-System:	☒ NO	☐ YES	11.4.2.4
					11.4.2.5
11.4	Compensating Construction:	Structural:	☒ NO	☐ YES (EXPLAIN)	11.4.3
		By Increase in Occupant Load:	☒ NO	☐ YES (EXPLAIN)	11.4.3.2
		By Change of Major Occupancy:	☒ NO	☐ YES (EXPLAIN)	11.4.3.3
		Plumbing:	☒ NO	☐ YES (EXPLAIN)	11.4.3.4
		Sewage-System:	☒ NO	☐ YES (EXPLAIN)	11.4.3.5
					11.4.3.6
11.5	Compliance Alternatives Proposed	☒ NO ☐ YES (GIVE NUMBER(S))			11.5.1

4 A-001 OBC MATRIX
SCALE: NTS

SYMBOLS LEGEND:

00	WALL TYPE	PT1	FINISH TAG	F.H.C.	FIRE HOSE CABINET		AIR GRILLE (RETURN)		LIGHT FIXTURE
000	WINDOW TAG	+8'-0"	ELEVATION TAG		CENTRLINE		EXHAUST FAN		
1 A	DOOR TAG	1	REVISION #	EPO	EMERGENCY POWER OFF BUTTON (REFER TO ELEC.)		LIGHT FIXTURE		AIR DIFFUSER (SUPPLY)

3 A-001 SYMBOLS LEGEND
SCALE: NTS

2 A-001 LOCATION PLAN
SCALE: NTS

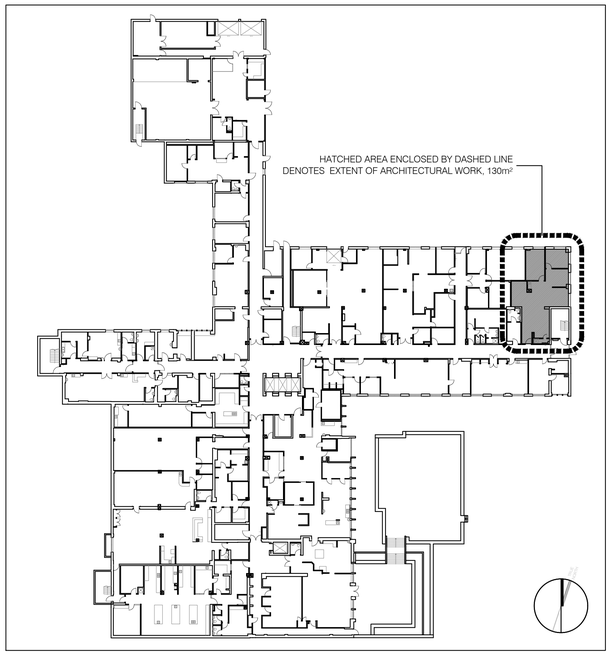

1 A-001 KEY PLAN - LEVEL B1
SCALE: NTS

NO.	DATE	ISSUED
06	2026/01/06	ISSUED FOR TENDER
05	2025/12/11	ISSUED FOR 90% CD
04	2025/12/09	ISSUED FOR PERMIT
03	2025/10/15	ISSUED FOR 50% CD
02	2025/10/10	ISSUED FOR CLIENT REVIEW
01	2025/06/06	ISSUED FOR 100% DD

NOTES

CONTRACTOR MUST CHECK AND VERIFY ALL DIMENSIONS SHOWN ON DRAWINGS WITH SITE CONDITIONS, PRIOR TO THE WORK AND NOTIFY THE ARCHITECT OF DIFFERENCES. AWAIT CLARIFICATION BEFORE CONTINUING.

DO NOT SCALE DRAWINGS.

ALL DRAWINGS, SPECIFICATIONS AND RELATED DOCUMENTS ARE THE COPYRIGHT PROPERTY OF THE ARCHITECT AND MUST BE RETURNED UPON REQUEST. REPRODUCTION OF DRAWINGS, SPECIFICATIONS AND RELATED DOCUMENTS IN PART OR IN WHOLE IS FORBIDDEN WITHOUT THE ARCHITECT'S WRITTEN PERMISSION.

THESE DRAWINGS ARE FOR PERMIT PURPOSES ONLY. THEY INDICATE DESIGN INTENT ONLY AND DO NOT FULLY DESCRIBE OR SPECIFY ALL CONDITIONS, MATERIAL OR ASSEMBLIES. REQUEST FURTHER INFORMATION FROM ARCHITECT PRIOR TO COMMENCING CONSTRUCTION AS REQUIRED.

ARCHITECT:
CARTER A
DAVID CARTER ARCHITECTS INC.
688 Richmond Street West, Suite 303,
Toronto Ontario Canada M6J 1C5 | 416 977 6300

MECHANICAL AND ELECTRICAL ENGINEERING:
QUASAR
250 Rowntree Dairy Road Woodbridge, ON L4L 9J7

STRUCTURAL ENGINEERING:
HONEYCOMB
A MEMBER OF BPA
133 Richmond St W, Suite 302, Toronto, ON M5H 2L3

CLIENT:
COLLINGWOOD G&M HOSPITAL

NUCLEAR MEDICINE SPECT/CT SUITE
COLLINGWOOD GENERAL AND MARINE HOSPITAL
459 HUME STREET, COLLINGWOOD ON

COVER SHEET

ENTERED: JM
CHECKED: DC
DATE: 2025/04/23
PROJECT NO. 24-200
DRAWING NO. A001

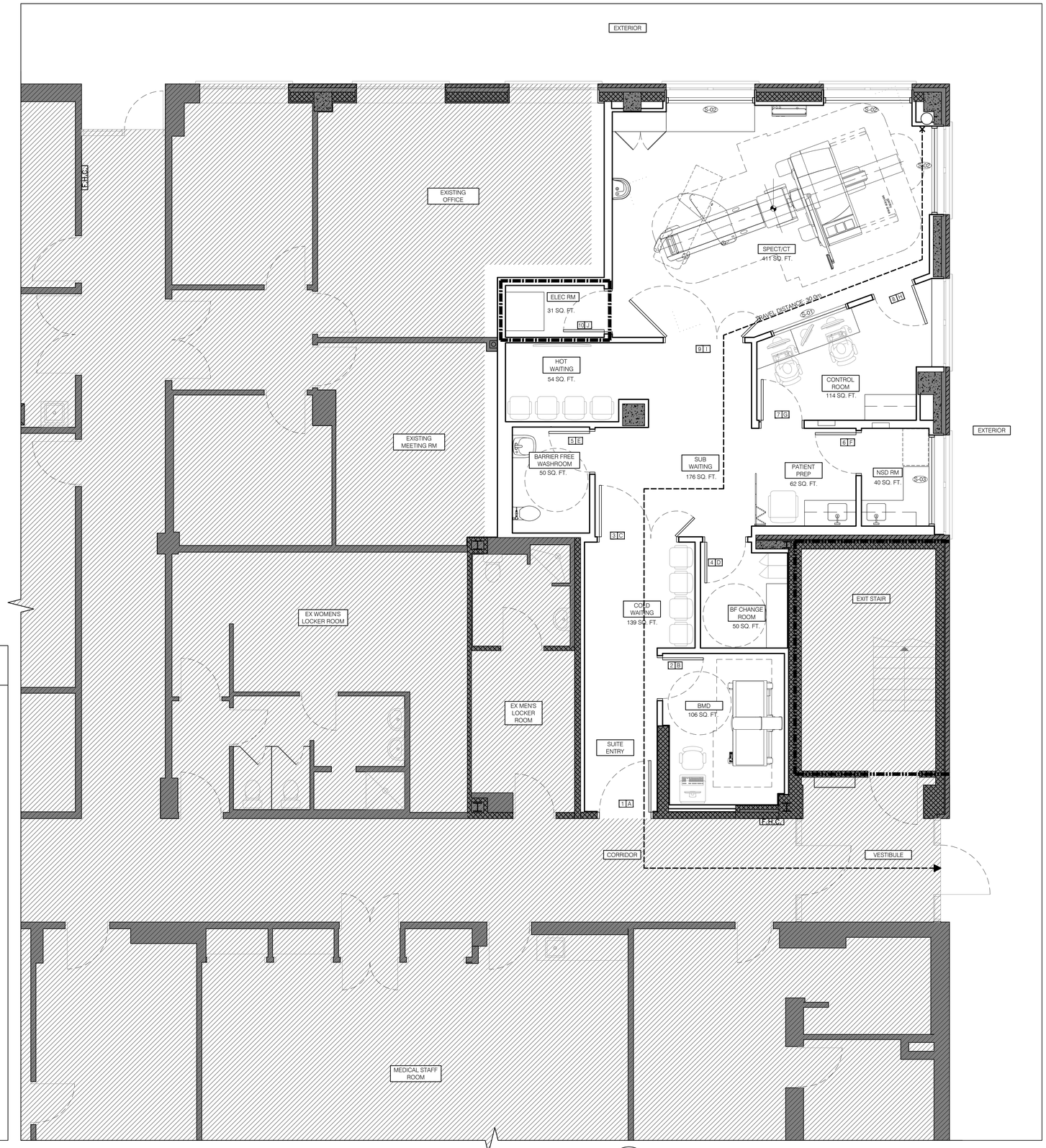

FIRE PROTECTION NOTES

1. REQUIRED MEANS OF EGRESS SHALL BE MAINTAINED AND LIFE SAFETY DEVICES TO REMAIN IN OPERATION AT ALL TIMES PER BUILDING CODES.

2. SPRINKLER AND FIRE ALARM SYSTEMS SHALL BE PUT IN SERVICE AT THE END OF EACH WORKING DAY.

3. MAINTAIN FIRE RESISTANCE RATING OF EXISTING ASSEMBLIES.

4. REPAIR/RESTORE ALL EXISTING FIRE STOPPING, SMOKE SEALS AND APPLIED FIRE PROTECTION WITHIN THE CONTRACT AREA WHICH ARE FOUND TO BE DEFICIENT.

5. REPAIR/RESTORE ALL EXISTING FIRE STOPPING, SMOKE SEALS AND APPLIED FIRE PROTECTION THAT ARE AFFECTED OR DAMAGED AS A RESULT OF THE PROPOSED WORK.

6. PROVIDE FIRESTOPPING AND SMOKE SEALS AT ALL SERVICE PENETRATIONS OF NEW WALL AND/OR FLOOR FIRE SEPARATIONS. FIRESTOPPING RATING TO MATCH FIRE RESISTANCE RATING (FRR) OF THE FIRE SEPARATION.

7. ALL MATERIALS AND WORK SHALL MEET OR EXCEED THE ONTARIO BUILDING CODE REQUIREMENTS. INTERIOR FINISHES TO HAVE A FLAME SPREAD RATING NOT GREATER THAN 150 FOR WALLS AND CEILINGS. ALL PLYWOOD SUBSTRATES AND WOOD BLOCKING TO BE FIRE RETARDANT TREATED.

LEGEND - CODE COMPLIANCE

- NOT IN CONTRACT / NOT IN SCOPE
- EXISTING CONSTRUCTION TO REMAIN
- NEW CONSTRUCTION
- LINE OF NEW 1 HOUR FIRE SEPARATION
- LINE OF EXISTING 2 HOUR FIRE SEPARATION

01 A002 FIRE SEPARATION & TRAVEL DISTANCE PLAN
1/4" = 1'-0"

NO.	DATE	ISSUED
06	2026/01/06	ISSUED FOR TENDER
05	2025/12/11	ISSUED FOR 90% CD
04	2025/12/09	ISSUED FOR PERMIT
03	2025/10/15	ISSUED FOR 50% CD
02	2025/10/10	ISSUED FOR CLIENT REVIEW
01	2025/06/06	ISSUED FOR 100% DD

NOTES

CONTRACTOR MUST CHECK AND VERIFY ALL DIMENSIONS SHOWN ON DRAWINGS WITH SITE CONDITIONS, PRIOR TO THE WORK AND NOTIFY THE ARCHITECT OF DIFFERENCES. AWAIT CLARIFICATION BEFORE CONTINUING.

DO NOT SCALE DRAWINGS.

ALL DRAWINGS, SPECIFICATIONS AND RELATED DOCUMENTS ARE THE COPYRIGHT PROPERTY OF THE ARCHITECT AND MUST BE RETURNED UPON REQUEST. REPRODUCTION OF DRAWINGS, SPECIFICATIONS AND RELATED DOCUMENTS IN PART OR IN WHOLE IS FORBIDDEN WITHOUT THE ARCHITECT'S WRITTEN PERMISSION.

THESE DRAWINGS ARE FOR PERMIT PURPOSES ONLY. THEY INDICATE DESIGN INTENT ONLY AND DO NOT FULLY DESCRIBE OR SPECIFY ALL CONDITIONS, MATERIAL OR ASSEMBLIES. REQUEST FURTHER INFORMATION FROM ARCHITECT PRIOR TO COMMENCING CONSTRUCTION AS REQUIRED.

ARCHITECT:
CARTER AI
DAVID CARTER ARCHITECTS INC.
688 Richmond Street West, Suite 303,
Toronto Ontario Canada M6J 1C5 | 416 977 6300

MECHANICAL AND ELECTRICAL ENGINEERING:
QUASAR
250 Rowntree Dairy Road Woodbridge, ON L4L 9J7

STRUCTURAL ENGINEERING:
HONEYCOMB
A MEMBER OF BPA
133 Richmond St W, Suite 302, Toronto, ON M5H 2L3

CLIENT:
COLLINGWOOD G&M HOSPITAL

NUCLEAR MEDICINE SPECT/CT SUITE

COLLINGWOOD GENERAL AND MARINE HOSPITAL

459 HUME STREET, COLLINGWOOD ON

PROJECT NORTH

TRAVEL DISTANCE & FIRE SEPARATION PLAN

ENTERED: JM
CHECKED: DC
DATE: 2025/04/23
PROJECT NO. 24-200

DRAWING NO. A002

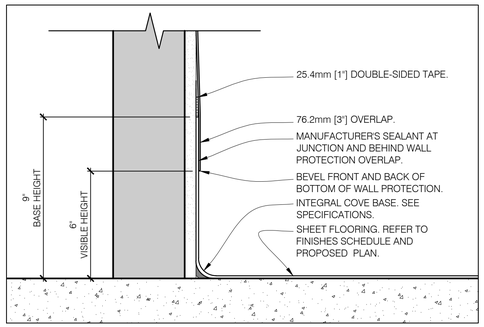

3 / A-003 **WB-1 DETAIL**
SCALE: NTS

ASSEMBLIES SCHEDULE

C1

ACOUSTIC CEILING TILE

- WHITE - 609mm x 609mm x 19mm CLASS A ACT PANEL. REFER TO SPECIFICATION AND FINISH SCHEDULE.
- EXPOSED ACT T-GRID SUSPENDED TO U/S OF EXISTING CONCRETE SLAB (EXISTING CEILING GRID TO REMAIN WHERE NOTED ON RCP)

C2

ARCHITECTURAL SUSPENDED CEILING

- PAINT FINISH (REFER TO FINISH SCHEDULE AND SPEC)
- 1 LAYER 15.9mm [5/8"] GWB
- 22mm METAL FURRING CHANNELS @ 600mm O.C.
- 38 mm GALVANIZED COLD ROLLED CHANNELS (PERPENDICULAR TO CHANNEL GRID SUSPENDED FROM STRUCTURE ABOVE).

C3

ARCHITECTURAL SUSPENDED CEILING

- PAINT FINISH (REFER TO FINISH SCHEDULE AND SPEC)
- 1 LAYER 15.9mm [5/8"] MOISTURE RESISTANT GWB
- 22mm METAL FURRING CHANNELS @ 600mm O.C.
- 38 mm GALVANIZED COLD ROLLED CHANNELS (PERPENDICULAR TO CHANNEL GRID SUSPENDED FROM STRUCTURE ABOVE).

P1

INTERIOR PARTITION (NON-LOADBEARING)
1/32" LEAD-LINED

- 1 LAYER 15.9mm [5/8"] REGULAR GWB
- 92mm [3-5/8"] STEEL STUDS, 20 ga, SPACED @ MAX 400mm [16"] O.C.
- MINERAL WOOL
- 1 LAYER 15.9mm [5/8"] REGULAR GWB

P2

INTERIOR PARTITION (NON-LOADBEARING)
1/16" LEAD-LINED

- 1 LAYER 15.9mm [5/8"] REGULAR GWB
- 1 LAYER 1.6mm [1/16"] THICK LEAD SHIELDING
  - PROVIDE 50mm [2"] WIDE 1/16" THICK SHEET LEAD AT SEAMS B/W LEAD SHEETS, TYP.
  - PROVIDE 1/16" THICK SPACERS AT STUDS OTHER THAN THOSE CENTRED AT SEAMS.
  - PROVIDE 3/8"Ø LEAD DISCS TO COVER COUNTERSUNK SCREWS, TYP.
- 3-5/8" STEEL STUDS, 20 ga, SPACED @ MAX 400mm [16"] O.C.
- MINERAL WOOL
- 1 LAYER 15.9mm [5/8"] REGULAR GWB

P3

INTERIOR PARTITION (NON-LOADBEARING)
1/32" LEAD-LINED

- 1 LAYER 15.9mm [5/8"] REGULAR GWB
- 1 LAYER 0.8mm [1/32"] THICK LEAD SHIELDING
  - PROVIDE 50mm [2"] WIDE 1/32" THICK SHEET LEAD AT SEAMS B/W LEAD SHEETS, TYP.
  - PROVIDE 1/32" THICK SPACERS AT STUDS OTHER THAN THOSE CENTRED AT SEAMS.
  - PROVIDE 3/8"Ø LEAD DISCS TO COVER COUNTERSUNK SCREWS, TYP.
- 3-5/8" STEEL STUDS, 20 ga, SPACED @ MAX 400mm [16"] O.C.
- MINERAL WOOL
- 1 LAYER 15.9mm [5/8"] REGULAR GWB

P4

RESERVED

P5

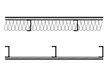

INTERIOR CHASE PARTITION (NON-LOADBEARING)
3/32" LEAD-LINED

- 1 LAYER 15.9mm [5/8"] GWB TO UNDERSIDE OF STRUCTURE
- 1 LAYER 2.4mm [3/32"] THICK LEAD SHIELDING EXTENDING TO 6'-0" AFF.
  - PROVIDE 50mm [2"] WIDE 3/32" THICK SHEET LEAD AT SEAMS B/W LEAD SHEETS, TYP.
  - PROVIDE 3/32" THICK SPACERS AT STUDS OTHER THAN THOSE CENTRED AT SEAMS.
  - PROVIDE 3/8"Ø LEAD DISCS TO COVER COUNTERSUNK SCREWS, TYP.
- 92mm [3-5/8"] STEEL STUDS, 20 ga, SPACED @ 406mm [16"] O.C.
- 89mm [3-1/2"] MINERAL WOOL (ONE SIDE)
- 135mm [5-1/4"] AIR SPACE
- 92mm [3-5/8"] STEEL STUDS, 20 ga, SPACED @ 406mm [16"] O.C.
- 1 LAYER 15.9mm [5/8"] GWB TO UNDERSIDE OF STRUCTURE

P6

INTERIOR PARTITION (NON-LOADBEARING)
3/32" LEAD-LINED

- 1 LAYER 15.9mm [5/8"] REGULAR GWB
- 1 LAYER 2.4mm [3/32"] THICK LEAD SHIELDING
  - PROVIDE 50mm [2"] WIDE 3/32" THICK SHEET LEAD AT SEAMS B/W LEAD SHEETS, TYP.
  - PROVIDE 3/32" THICK SPACERS AT STUDS OTHER THAN THOSE CENTRED AT SEAMS.
  - PROVIDE 3/8"Ø LEAD DISCS TO COVER COUNTERSUNK SCREWS, TYP.
- 6" STEEL STUDS, 20 ga, SPACED @ MAX 400mm [16"] O.C.
- MINERAL WOOL
- 1 LAYER 15.9mm [5/8"] REGULAR GWB

P7

1-HR FRR INTERIOR PARTITION (NON-LOADBEARING)
1/16" LEAD-LINED

ULC DESIGN NO. W453

- 1 LAYER 15.9mm [5/8"] TYPE X GYPSUM BOARD
- 1 LAYER 1.6mm [1/16"] THICK LEAD SHIELDING (CT ROOM SIDE OF STUDS).
  - PROVIDE 50mm [2"] WIDE 1/16" THICK SHEET LEAD AT SEAMS B/W LEAD SHEETS, TYP.
  - PROVIDE 1/16" THICK SPACERS AT STUDS OTHER THAN THOSE CENTRED AT SEAMS.
  - PROVIDE 3/8"Ø LEAD DISCS TO COVER COUNTERSUNK SCREWS, TYP.
- 92mm [3-5/8"] STEEL STUDS, 20 ga, @ 610mm [24"] O.C.
- 89mm [3-1/2"] MINERAL WOOL
- 1 LAYER 15.9mm [5/8"] TYPE X GYPSUM BOARD

P8

1-HR FRR INTERIOR PARTITION (NON-LOADBEARING)

ULC DESIGN NO. W453

- 1 LAYER 15.9mm [5/8"] TYPE X GWB
- 152mm [6"] STEEL STUDS, 20 ga, SPACED @ 406mm [16"] O.C.
- 89mm [3-1/2"] min. MINERAL WOOL
- 1 LAYER 15.9mm [5/8"] TYPE X GWB

P9

1-HR FRR INTERIOR PARTITION (NON-LOADBEARING)
1/32" LEAD-LINED

ULC DESIGN NO. W453

- 1 LAYER 15.9mm [5/8"] TYPE X GWB
- 1 LAYER 0.8mm [1/32"] THICK LEAD SHIELDING.
  - PROVIDE 50mm [2"] WIDE 1/32" THICK SHEET LEAD AT SEAMS B/W LEAD SHEETS, TYP.
  - PROVIDE 1/32" THICK SPACERS AT STUDS OTHER THAN THOSE CENTRED AT SEAMS.
  - PROVIDE 3/8"Ø LEAD DISCS TO COVER COUNTERSUNK SCREWS, TYP.
- 152mm [6"] STEEL STUDS, 20 ga, SPACED @ 406mm [16"] O.C.
- 89mm [3-1/2"] min. MINERAL WOOL
- 1 LAYER 15.9mm [5/8"] TYPE X GWB

P10

INTERIOR PARTITION (NON-LOADBEARING)
1/16" LEAD-LINED

- 1 LAYER 15.9mm [5/8"] REGULAR GWB
- 1 LAYER 1.6mm [1/16"] THICK LEAD SHIELDING EXTENDING TO 6'-0" AFF.
  - PROVIDE 50mm [2"] WIDE 1/16" THICK SHEET LEAD AT SEAMS B/W LEAD SHEETS, TYP.
  - PROVIDE 1/16" THICK SPACERS AT STUDS OTHER THAN THOSE CENTRED AT SEAMS.
  - PROVIDE 3/8"Ø LEAD DISCS TO COVER COUNTERSUNK SCREWS, TYP.
- 6" STEEL STUDS, 20 ga, SPACED @ MAX 400mm [16"] O.C.
- MINERAL WOOL
- 1 LAYER 15.9mm [5/8"] REGULAR GWB

F1

INTERIOR FURRING (NON-LOADBEARING)
1/32" LEAD-LINED

- 1 LAYER 15.9mm [5/8"] REGULAR GWB
- 1 LAYER 0.8mm [1/32"] THICK LEAD SHIELDING.
  - PROVIDE 50mm [2"] WIDE 1/32" THICK SHEET LEAD AT SEAMS B/W LEAD SHEETS, TYP.
  - PROVIDE 1/32" THICK SPACERS AT STUDS OTHER THAN THOSE CENTRED AT SEAMS.
  - PROVIDE 3/8"Ø LEAD DISCS TO COVER COUNTERSUNK SCREWS, TYP.
- 2-1/2" STEEL STUDS, 20 ga, SPACED @ MAX 400mm [16"] O.C.
- 1/2" AIR SPACE

F2

INTERIOR FURRING (NON-LOADBEARING)

- 1 LAYER 15.9mm [5/8"] REGULAR GWB
- 2-1/2" STEEL STUDS, 20 ga, SPACED @ MAX 400mm [16"] O.C.
- 1/2" AIR SPACE

F3

INTERIOR FURRING (NON-LOADBEARING)
1/32" LEAD-LINED

- 1 LAYER 15.9mm [5/8"] REGULAR GWB
- 1 LAYER 0.8mm [1/32"] THICK LEAD SHIELDING
  - PROVIDE 50mm [2"] WIDE 1/32" THICK SHEET LEAD AT SEAMS B/W LEAD SHEETS, TYP.
  - PROVIDE 1/32" THICK SPACERS AT STUDS OTHER THAN THOSE CENTRED AT SEAMS.
  - PROVIDE 3/8"Ø LEAD DISCS TO COVER COUNTERSUNK SCREWS, TYP.
- 3-5/8" STEEL STUDS, 20 ga, SPACED @ MAX 400mm [16"] O.C.

F4

INTERIOR FURRING (NON-LOADBEARING)

- 1 LAYER 15.9mm [5/8"] REGULAR GWB
- 7/8" METAL FURRING CHANNELS, 20 ga, SPACED @ MAX 400mm [16"] O.C.

F5

INTERIOR FURRING (NON-LOADBEARING)
1/32" LEAD-LINED

- 1 LAYER 15.9mm [5/8"] REGULAR GWB
- 1 LAYER 0.8mm [1/32"] THICK LEAD SHIELDING.
  - PROVIDE 50mm [2"] WIDE 1/32" THICK SHEET LEAD AT SEAMS B/W LEAD SHEETS, TYP.
  - PROVIDE 1/32" THICK SPACERS AT STUDS OTHER THAN THOSE CENTRED AT SEAMS.
  - PROVIDE 3/8"Ø LEAD DISCS TO COVER COUNTERSUNK SCREWS, TYP.
- 3-5/8" STEEL STUDS, 20 ga, SPACED @ MAX 400mm [16"] O.C.
- MINERAL WOOL
- 1/2" AIR SPACE

F6

INTERIOR FURRING (NON-LOADBEARING)

- 1 LAYER 15.9mm [5/8"] REGULAR GWB LAMINATED TO EXISTING SUBSTRATE. PREPARE SUBSTRATE AS REQUIRED TO CREATE A SMOOTH AND LEVEL SURFACE FOR GWB.
- EXISTING CONCRETE BLOCK (6" BLOCK MIN., VIF)

E1

EXTERIOR WALL CONSTRUCTION

- 4" FACE BRICK
- 2" AIR SPACE
- 3" RIGID INSULATION, VAP. BAR.
- POURED CONCRETE OR CONCRETE BLOCK (SEE PLANS)

NOTES
1. AT FIRE RATED PARTITIONS: EXTEND FROM TOP OF CONCRETE SLAB TO UNDERSIDE OF CONCRETE SLAB, UNLESS NOTED OTHERWISE.
2. AT NON-FIRE RATED PARTITIONS: EXTEND FRAMING FROM TOP OF CONCRETE SLAB TO UNDERSIDE OF STRUCTURE AND EXTEND GYPSUM AND FINISHES TO 4" ABOVE UNDERSIDE OF ACOUSTIC TILE CEILING, UNLESS NOTED OTHERWISE.
3. PROVIDE FIRE STOPPING AND FIRE SEALANT AT ALL PENETRATIONS THROUGH NEW FIRE RATED PARTITIONS AND AT ALL SIDES TO MATCH FIRE RATING INDICATED.
4. REFER TO FINISH SCHEDULES.
5. WHERE NEW PARTITIONS ARE INSTALLED AROUND WASHROOMS, USE MOISTURE RESISTANT GWB.
6. LEAD LINING IN WALLS OF SPECT/CT AND ELECTRICAL ROOM TO BE INSTALLED UP TO 2.1m AFF, ALL OTHER ROOMS 1.8m AFF.
7. REFER TO FLOOR PLANS AND DETAILS FOR ADDITIONAL INFORMATION REGARDING LEAD SHIELDING LOCATIONS AND ORIENTATION.

2 / A-003 **ASSEMBLY SCHEDULE**
SCALE: NTS

FINISH SCHEDULE

LOCATION	FLOOR	BASE	WALL (NORTH)	WALL (EAST)	WALL (SOUTH)	WALL (WEST)	CEILING	NOTES
SUITE ENTRY / COLD WAITING	FF-1	WB-1	PT-4, WP-1	PT-4, WP-1	PT-4, WP-1	PT-4, WP-1	ACT-1	WP-1 ON ALL WALLS
BMD	FF-1	WB-2	PT-1	PT-1	PT-1	PT-1	ACT-1	
SUB-WAITING	FF-1	WB-2	PT-1	PT-1	PT-1	PT-1	ACT-1	
PATIENT PREP	FF-1	WB-2	PT-1	PT-1	PT-1, WP-3	PT-1	ACT-1	REFER TO DRAWINGS FOR LOCATION OF WALL PROTECTION.
BF WASHROOM	FF-1	WB-1	WP-2	WP-2	WP-2	WP-2	GWB, PT-3	WP-2 ON ALL WALLS
BF CHANGEROOM	FF-1	WB-2	PT-4	PT-4	PT-4	PT-4	ACT-1	
HOT WAITING	FF-1	WB-2	PT-4	PT-4	PT-4	PT-4	ACT-1	REFER TO DRAWINGS FOR LOCATION OF WALL PROTECTION AND PT-4
NUCLEAR SUBSTANCES DISPENCING ROOM (NSD)	FF-1	WB-1	WP-2	WP-2	WP-2	WP-2	ACT-1	WP-2 ON ALL WALLS
CONTROL ROOM	FF-1	WB-2	PT-4	PT-4	PT-4	PT-4	ACT-1	
SPECT/CT ROOM	FF-1	WB-1	PT-1, WP-1	PT-1, WP-1	PT-1, WP-1	PT-1, WP-1	ACT-1	WP-1 ON ALL WALLS
ELECTRICAL ROOM	FF-1	WB-2	PT-1	PT-1	PT-1	PT-1	ACT-1	
EXISTING OFFICE	EX	EX	PT-1	PT-1	PT-1	PT-1	ACT-1	NEW PAINT AND ACT CEILING
EXISTING MEETING ROOM	EX	EX	PT-1	PT-1	PT-1	PT-1	EX ACT	NEW PAINT ONLY

FINISH TYPES

TYPE	DESCRIPTION
CT-1	COUNTERTOP: CORIAN SOLID SURFACE, COLOUR: ANTARCTICA
FF-1	POLYFLOR PEARLAZZO PUR HOMOGENOUS VINYL SHEET FLOORING, COLOUR: RAIN CLOUD 9718
WB-1	POLYFLOR PEARLAZZO PUR HOMOGENOUS VINYL SHEET FLOORING, COLOUR: RAIN CLOUD 9718 INTEGRAL COVED WALL BASE TO 6" HEIGHT.
WB-2	POLYFLOR PEARLAZZO PUR HOMOGENOUS VINYL SHEET FLOORING, COLOUR: RAIN CLOUD 9718 INTEGRAL COVED WALL BASE TO 6" HEIGHT WITH CAPPING STRIP, CS-NC, GREY 9540.
PL-1	PLASTIC LAMINATE (MILLWORK EXTERIOR): WILSONART CHEMSURF HPL, COLOUR: GRAPHITE 10657. INT: WILSONART WHITE CABINET LINER, FINISH: MATTE
PL-2	PLASTIC LAMINATE (MILLWORK INTERIOR): WILSONART WHITE CABINET LINER, FINISH: MATTE
PT-1	WALL PAINT (PARTITIONS): PREMIUM-GRADE LATEX-BASED PAINT, EGGSHELL SHEEN, COLOUR: BENJAMIN MOORE #OC-65 'CHANTILLY LACE'
PT-2	METAL PAINT (DOOR FRAME, TRIM, MISC. STEEL): PRIME AND PAINT WITH PREMIUM-GRADE LATEX-BASED PAINT, SEMI-GLOSS SHEEN, BENJAMIN MOORE #OC-28 'COLLINGWOOD'
PT-3	CEILING PAINT (GWB CEILINGS, BULKHEADS): PREMIUM-GRADE LATEX PAINT, FLAT SHEEN, COLOUR: BENJAMIN MOORE #OC-65 'CHANTILLY LACE'
PT-4	WALL PAINT (ACCENT): PREMIUM-GRADE LATEX-BASED PAINT, EGGSHELL SHEEN, COLOUR: BENJAMIN MOORE 'TRANQUILLITY AF-490'.
PT-5	METAL PAINT (DOOR SLAB): PRIME AND PAINT WITH PREMIUM-GRADE LATEX-BASED PAINT, SEMI-GLOSS SHEEN, SHERWIN-WILLIAMS, IRON ORE SW 7069
WP-1	WALL PROTECTION PANELS (PARTIAL HEIGHT): ALTRO WHITEROCK, COLOUR: 'WHITE'. SOLID COLOUR. PROVIDE TOP AND SIDE EDGE TRIM AS REQUIRED, COLOUR MATCHED TO PANEL. EXTEND TO 1200mm A.F.F.
WP-2	WALL PROTECTION PANELS (FULL HEIGHT): ALTRO WHITEROCK, COLOUR: 'WHITE'. SOLID COLOUR. PROVIDE TOP AND SIDE EDGE TRIM AS REQUIRED, COLOUR MATCHED TO PANEL.
WP-3	WALL PROTECTION PANELS (BACKSPLASH): ALTRO WHITEROCK, COLOUR: 'WHITE'. SOLID COLOUR. PROVIDE TOP AND SIDE EDGE TRIM AS REQUIRED, COLOUR MATCHED TO PANEL. EXTEND TO U/S UPPER CABINETS OR 1425mm A.F.F.
ACT-1	ACOUSTICAL CEILING TILE: ARMSTRONG ULTIMA HEALTH ZONE, SQUARE LAY-IN, 1935, SIZE: 2' x 2' x 3/4"; COLOUR: WHITE; ARMSTRONG PRELUDE XL EXPOSED TEE 15/16" SUSPENSION SYSTEM
WF-1	WINDOW FILM 3M CRYSTAL PRIVACY FILM, 'DUSTED WHITE' 7725SE-314. CONTRACTOR TO PROVIDE SAMPLE RANGE FOR OWNER'S SELECTION.

FINISH NOTES:
1. PAINT IN ACCORDANCE WITH SCHEDULE AND WHERE INDICATED BY NOTES ON DRAWINGS.
2. DO NOT PAINT DOOR HARDWARE OR THRESHOLDS.
3. ALL ACCESSORIES RECOMMENDED BY MANUFACTURER'S INSTALLATION INSTRUCTIONS TO BE INCLUDED AS PART OF THE WORK.
4. SUBMIT PRODUCT DATA AND MSDS SHEETS FOR REVIEW AND ACCEPTANCE PRIOR TO STARTING WORK. REFER TO SPECIFICATION.
5. SUBMIT SAMPLES AS INDICATED IN SPECIFICATION.
6. PAINT BOTH SIDES OF PROPOSED INTERIOR WALLS WITHIN AREA OF WORK INDICATED.
7. PAINT SERVICES AT EXPOSED CEILINGS AT NEW EQUIPMENT ROOM EXPANSION TO MATCH EXISTING EQUIPMENT ROOM. MATCH EXISTING COLOURS FOR CONSISTENCY FOR EACH TYPE OF SERVICE TO BE PAINTED. REFER TO MECHANICAL AND ELECTRICAL SPECIFICATIONS.

1 / A-003 **FINISH SCHEDULE**
SCALE: NTS

NO.	DATE	ISSUED
06	2026/01/06	ISSUED FOR TENDER
05	2025/12/11	ISSUED FOR 90% CD
04	2025/12/09	ISSUED FOR PERMIT
03	2025/10/15	ISSUED FOR 50% CD
02	2025/10/10	ISSUED FOR CLIENT REVIEW
01	2025/06/06	ISSUED FOR 100% DD

NOTES

CONTRACTOR MUST CHECK AND VERIFY ALL DIMENSIONS SHOWN ON DRAWINGS WITH SITE CONDITIONS, PRIOR TO THE WORK AND NOTIFY THE ARCHITECT OF DIFFERENCES. AWAIT CLARIFICATION BEFORE CONTINUING.

DO NOT SCALE DRAWINGS.

ALL DRAWINGS, SPECIFICATIONS AND RELATED DOCUMENTS ARE THE COPYRIGHT PROPERTY OF THE ARCHITECT AND MUST BE RETURNED UPON REQUEST. REPRODUCTION OF DRAWINGS, SPECIFICATIONS AND RELATED DOCUMENTS IN PART OR IN WHOLE IS FORBIDDEN WITHOUT THE ARCHITECT'S WRITTEN PERMISSION.

THESE DRAWINGS ARE FOR PERMIT PURPOSES ONLY. THEY INDICATE DESIGN INTENT ONLY AND DO NOT FULLY DESCRIBE OR SPECIFY ALL CONDITIONS, MATERIAL OR ASSEMBLIES. REQUEST FURTHER INFORMATION FROM ARCHITECT PRIOR TO COMMENCING CONSTRUCTION AS REQUIRED.

ARCHITECT:
CARTER AI
DAVID CARTER ARCHITECTS INC.
688 Richmond Street West, Suite 303,
Toronto Ontario Canada M6J 1C5 | 416 977 6300

MECHANICAL AND ELECTRICAL ENGINEERING:
QUASAR
250 Rowntree Dairy Road Woodbridge, ON L4L 9J7

STRUCTURAL ENGINEERING:
HONEYCOMB
A MEMBER OF BPA
133 Richmond St W, Suite 302, Toronto, ON M5H 2L3

CLIENT:
COLLINGWOOD G&M HOSPITAL

NUCLEAR MEDICINE SPECT/CT SUITE
COLLINGWOOD GENERAL AND MARINE HOSPITAL
459 HUME STREET, COLLINGWOOD ON

PROJECT NORTH

FINISHES AND ASSEMBLIES SCHEDULES

ENTERED: JM
CHECKED: DC
DATE: 2025/04/23
PROJECT NO. 24-200
DRAWING NO. A003

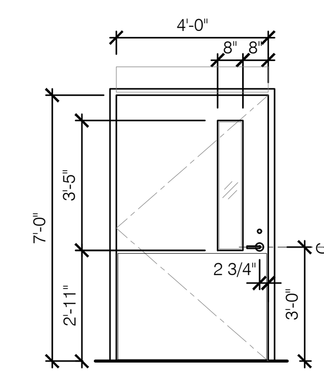

DOOR TYPE: D-1

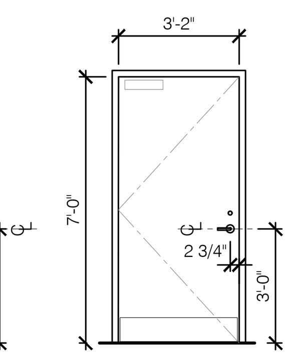

DOOR TYPE: D-2

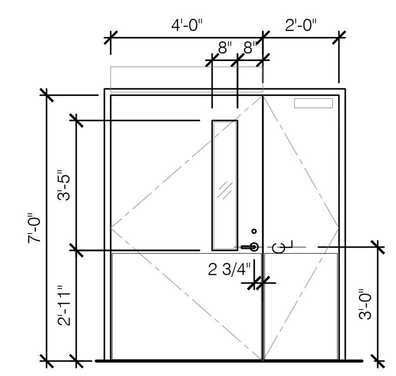

DOOR TYPE: D-3

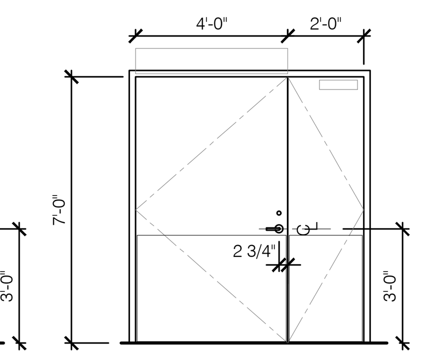

DOOR TYPE: D-3A

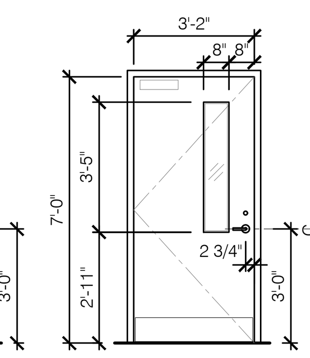

DOOR TYPE: D-4

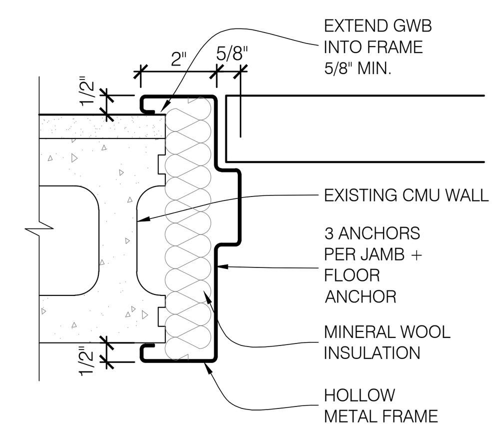

FRAME TYPE F-1

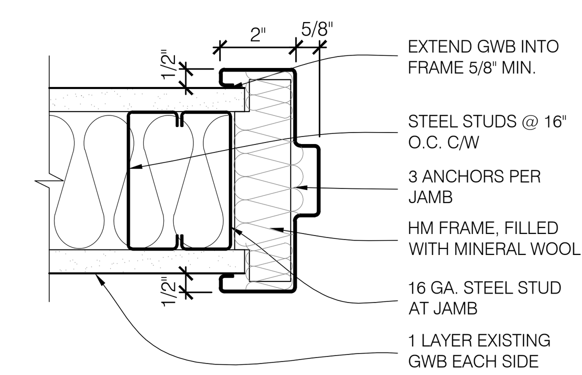

FRAME TYPE F-2

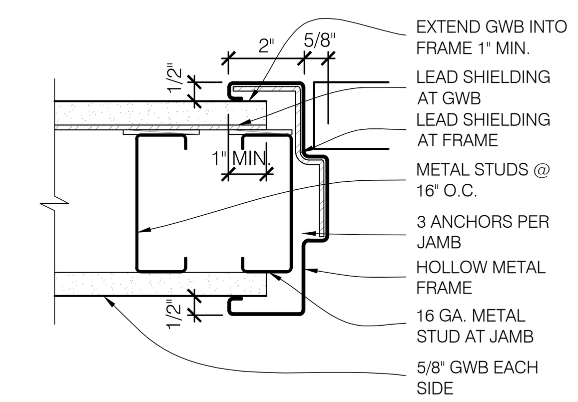

FRAME TYPE: F-3

DOOR AND FRAME SCHEDULE

DOOR										FRAME				DOOR/ FRAME	NOTES
DOOR #	HARDWARE #	WIDTH	HEIGHT	THICKNESS	TYPE	FRR	MATERIAL	FINISH	LITE	TYPE	FRR	MATERIAL	FINISH	LEAD LINED	
1	A	4'-0"	7'-0"	1-3/4"	D-1	-	HM	PT-2	SG	F-1	-	HM	PT-2	NO	SUITE ENTRY SINGLE DOOR
2	B	3'-2"	7'-0"	1-3/4"	D-4	-	HM	PT-2	SG / WF-1	F-2	-	HM	PT-2	NO	BMD SINGLE DOOR
3	C	4'-0",2'-0"	7'-0"	1-3/4"	D-3	-	HM	PT-2	SG	F-2	-	HM	PT-2	NO	SUB-WAITING DOUBLE DOORS
4	D	3'-2"	7'-0"	1-3/4"	D-2	-	HM	PT-2	-	F-3	-	HM	PT-2	YES	BF CHANGE ROOM SINGLE DOOR
5	E	3'-2"	7'-0"	1-3/4"	D-2	-	HM	PT-2	-	F-3	-	HM	PT-2	YES	BF W/C SINGLE DOOR
6	F	3'-2"	7'-0"	1-3/4"	D-2	-	HM	PT-2	-	F-3	-	HM	PT-2	YES	HOT LAB SINGLE DOOR
7	G	3'-2"	7'-0"	1-3/4"	D-2	-	HM	PT-2	-	F-3	-	HM	PT-2	YES	CONTROL ROOM SINGLE DOOR
8	H	3'-2"	7'-0"	1-3/4"	D-2	-	HM	PT-2	-	F-3	-	HM	PT-2	YES	CONTROL ROOM/CT SINGLE DOOR
9	I	4'-0",2'-0"	7'-0"	1-3/4"	D-3A	-	HM	PT-2	-	F-3	-	HM	PT-2	YES	SPECT/CT DOUBLE DOOR
10	J	3'-2"	7'-0"	1-3/4"	D-2	3/4 HR	HM	PT-2	-	F-2	3/4 HR	HM	PT-2	NO	ELECTRICAL ROOM SINGLE DOOR

LEGEND

AL ALUMINUM DOOR/FRAME
HM HOLLOW METAL DOOR/FRAME
WDS WOOD-SOLID DOOR
WDH WOOD-HOLLOW DOOR
SG SAFETY GLASS LITE TEMPERED (3/8" THICK MIN.)
LG LEADED GLASS LITE

1 | A — DOOR # / HARDWARE #

DOOR HARDWARE SCHEDULE

HARDWARE #	CLOSER / OPENER	EXIT DEVICE	HANDLE	LOCKING DEVICE	HINGES	WEATHER-STRIPPING	ELECTRIC STRIKE	LATCH / DOOR GUARD	KICK PLATE	DOOR STOP	DOOR BOLTS	DOOR COORD-INATOR	LEAD LINED	NOTES
A	ADO-1, PB-1	-	HD-1	LD-2	HN-1	WS-1	ES-2	-	KP-2	DS-1	-	-	NO	SUITE ENTRY. COORD W/ ELEC: ADO, PB, ES, DC, CR. INCLUDE OVERHEAD PRESENCE SENSOR TO HOLD DOOR OPEN WHILE THRESHOLD IS OCCUPIED
B	CL-2	-	HD-1	LD-3	HN-1	WS-1	-	-	KP-1	DS-1	-	-	NO	BMD.
C	ADO-1, PB-1, CL-2	-	HD-1	LD-4	HN-1, EH-1	WS-1	ES-2	AS-1	KP-2	DS-1	FB-1	CO-1	NO	SUB-WAIT. DOUBLE DOOR. COORD W/ ELEC: ADO, PB, ES, EH, DC. INCLUDE OVERHEAD PRESENCE SENSOR TO HOLD DOOR OPEN WHILE THRESHOLD IS OCCUPIED
D	ADO-1, PB-2/3	-	HD-1	LD-1	HN-1	WS-1	ES-1	-	KP-1	DS-1	-	-	YES	BF CHANGE. COORD W/ ELEC: ADO, PB, ES, DC.
E	ADO-1, PB-2/3	-	HD-1	LD-1	HN-1	WS-1	ES-1	-	KP-1	DS-1	-	-	YES	BF W/C. COORD W/ ELEC: ADO, PB, ES, DC.
F	CL-1	-	HD-1	LD-2	HN-1	WS-1	ES-2	-	KP-1	DS-1	-	-	YES	HOT LAB. COORD W/ ELEC: ES, CR, DC.
G	CL-2	-	HD-1	LD-2	HN-1	WS-1	-	-	KP-1	DS-1	-	-	YES	CONTROL ROOM.
H	CL-2	-	HD-1	LD-2	HN-1	WS-1	-	-	KP-1	DS-1	-	-	YES	CONTROL ROOM/CT.
I	ADO-1, PB-1, CL-2	-	HD-1	LD-4	HN-1, EH-1	WS-1	ES-2	AS-1	KP-2	DS-1	FB-1	CO-1	YES	SPECT/CT. DOUBLE DOOR. COORD W/ ELEC: ADO, PB, ES, EH, DC. INCLUDE OVERHEAD PRESENCE SENSOR TO HOLD DOOR OPEN WHILE THRESHOLD IS OCCUPIED
J	CL-1	-	HD-1	LD-1	HN-1	WS-1	-	-	KP-1	DS-1	-	-	NO	ELECTRICAL ROOM

MATERIAL

ADO-1 AUTOMATIC DOOR OPERATOR & CLOSER: MICOM SW-800. SURFACE MOUNT PULL SIDE (PUSH SIDE AT DOOR 9 ONLY). CLEAR ANODIZED FINISH. STANDARD FRAME APPLICATION. SET STOP FOR 90° / 100° TO SUIT LOCATION. ACTIVE LEAF OPERATION ONLY. DOOR OPERATOR TO BE ACTIVATED BY PUSH BUTTON ACTUATOR. REFER TO ELECTRICAL REQUIREMENTS.
AS-1 ASTRAGAL: KN CROWDER W-25, EXTRUDED ALUMINUM W/ NYLON BRUSH (BOTH LEAFS).
CL-1 CLOSER: LCN MODEL 4041XP, MOUNT ON PULL SIDE. CUSH-N-STOP ARM FUNCTION, SET STOP FOR 90° / 100° TO SUIT LOCATION. FINISH: STANDARD POWDER COAT ALUMINUM (689).
CL-2 CLOSER: LCN MODEL 4041XP, MOUNT ON PULL SIDE. HOLD-OPEN CUSH-N-STOP ARM FUNCTION, SET STOP FOR 90° / 100° TO SUIT LOCATION. FINISH: STANDARD POWDER COAT ALUMINUM (689).
CO-1 DOOR COORDINATOR: IVES COR SERIES.
DE-1 DOOR EDGE: GSH 30N STAINLESS STEEL DOOR EDGE, BOTH VERTICAL DOOR EDGES, FULL HEIGHT. PROVIDE CUT-OUTS FOR HINGES AND LOCKSET.
DS-1 DOOR STOP: SARGENT CONCEALED OVERHEAD STOP 690 S, STOP-ONLY FUNCTION, SET STOP FOR 90° / 100° TO SUIT LOCATION. SIZE TO SUIT DOOR WIDTH. #15 SATIN NICKEL FINISH, CLEAR COATED.
DS-2 DOOR STOP: SARGENT CONCEALED OVERHEAD STOP 690 H, STOP & HOLD-OPEN FUNCTION, SET STOP FOR 90° / 100° TO SUIT LOCATION. SIZE TO SUIT DOOR WIDTH. #15 SATIN NICKEL FINISH, CLEAR COATED.
EH-1 ELECTRIC HINGE: BEST/STANLEY CEFBB179 CONCEALED ELECTRIC HINGE, 4.5"x4.5", 5 KNUCKLE, 4 BALL BEARING BUTT HINGE, FULL MORTISE, FINISH: US26D.
ES-1 ELECTRIC STRIKE: HES 1006, FAIL SAFE, FINISH: 630. INSTALL AT FRAME OR INACTIVE LEAF.
ES-2 ELECTRIC STRIKE: HES 1006, FAIL SECURE, FINISH: 630. INSTALL AT FRAME OR INACTIVE LEAF.
FB-1 AUTO FLUSH BOLT: IVES FB31T, FOR METAL DOORS, TOP BOLT ONLY. FINISH: US32D.
HD-1 HANDLE: BEST LEVER: 15, ROSE: R, FINISH: 630.
HN-1 HINGES: BEST/STANLEY FBB179, 4.5"x4.5", 5 KNUCKLE, 4 BALL BEARING BUTT HINGES, FULL MORTISE, FINISH: US26D.
KP-1 KICK PLATE: GSH 80, STAINLESS STEEL, 8" HIGH TO MATCH WIDTH OF DOOR.
KP-2 KICK PLATE: GSH 80, STAINLESS STEEL, 34" HIGH TO MATCH WIDTH OF DOOR.
LD-1 LOCKING DEVICE: BEST ACCESS 45H STOREROOM 'D' FUNCTION MORTISE LOCK. NON-LOCKING IN DIRECTION TO EXIT. KEYED 'SFIC' CYLINDER OUTSIDE, KEY TO BUILDING STANDARD. FINISH: 630. LEAD-LINED 'LL' AT LEAD-LINED DOORS.
LD-2 LOCKING DEVICE: BEST ACCESS 45H CLASSROOM 'R' FUNCTION MORTISE LOCK. NON-LOCKING IN DIRECTION TO EXIT. KEYED 'SFIC' CYLINDER OUTSIDE, KEY TO BUILDING STANDARD. FINISH: 630. LEAD-LINED 'LL' AT LEAD-LINED DOORS.
LD-3 LOCKING DEVICE: BEST ACCESS 45H OFFICE 'A' FUNCTION MORTISE LOCK. NON-LOCKING IN DIRECTION TO EXIT. THUMBTURN LOCK INSIDE. KEYED 'SFIC' CYLINDER OUTSIDE, KEY TO BUILDING STANDARD. FINISH: 630. LEAD-LINED 'LL' AT LEAD-LINED DOORS.
LD-4 LATCHING DEVICE: BEST ACCESS 45H PASSAGE 'N' FUNCTION MORTISE SET. NON-LOCKING. FINISH: 630. LEAD-LINED 'LL' AT LEAD-LINED DOORS.
LG-1 LATCH GUARD (ASTRAGAL): FULL HEIGHT STEEL TO MATCH DOOR FINISH, INSTALL ON ACTIVE LEAF.
PB-1 PUSH BUTTON ACTUATOR: CAMDEN CM-40/4, 4-1/2" ROUND PUSH PLATE, HARD WIRED, FLUSH MOUNT/RECESSED IN WALL. ENGRAVED W/ INTERNATIONAL SYMBOL FOR ACCESSIBILITY AND "PUSH TO OPEN". SS FINISH. INSTALLED AT 1100mm HIGH.
PB-2 PUSH BUTTON ACTUATOR: CAMDEN CM-40/4, 4-1/2" ROUND PUSH PLATE, W/ 'AURA' SERIES ILLUMINATED RED/GREEN SWITCH KIT, HARD WIRED, FLUSH MOUNT/RECESSSED IN WALL. RED ILLUMINATION WHEN ROOM OCCUPIED, GREEN ILLUMINATION WHEN ROOM VACANT. ENGRAVED W/ INTERNATIONAL SYMBOL FOR ACCESSIBILITY AND "PUSH TO OPEN". SS FINISH. INSTALLED AT 1100mm HIGH.
PB-3 PUSH BUTTON: CAMDEN CM-2520/4855SE1 COMBINATION 'PUSH TO OPEN' & 'PUSH TO LOCK' BUTTON, 4-1/2" SQUARE W/ 2x4 'PUSH TO OPEN' BUTTON AND 2x4 'PUSH TO LOCK' BUTTON, W/ AURA SERIES RED/GREEN ILLUMINATION, HARD WIRED, FLUSH MOUNT/RECESSED IN WALL. RED ILLUMINATION WHEN DOOR LOCKED, GREEN ILLUMINATION WHEN DOOR UNLOCKED. LOCK BUTTON TO DISENGAGE PUSH BUTTON ACTUATOR OUTSIDE UNTIL 'PUSH TO OPEN' BUTTON SIDE IS ACTIVATED OR DOOR IS OPENED. REFER TO ELECTRICAL REQUIREMENTS. SS FINISH. INSTALLED AT 1100mm HIGH.
WS-1 WEATHERSTRIPPING: KN CROWDER W-20S WEATHERSTRIPPING AT JAMBS AND HEAD; KN CROWDER CT-52 AUTO DOOR BOTTOM W/ NEOPRENE SEAL, SEMI-MORTISED.
WS-2 WEATHERSTRIPPING: KN CROWDER W-22 SELF-ADHESIVE WEATHERSTRIPPING AT JAMBS AND HEAD; KN CROWDER W-24S DOOR SWEEP.

GENERAL NOTES

1. SITE VERIFY ALL DIMENSIONS.
2. REFER TO SPECIFICATION REQUIREMENTS.
3. COMPLY WITH OWNER'S SECURITY REQUIREMENTS.
4. SEE FINISH SCHEDULE FOR PAINT TYPES.
5. EXTERIOR HM DOOR SLABS: 16 GAUGE UNLESS NOTED OTHERWISE.
6. INTERIOR HM DOOR SLABS: 18 GAUGE UNLESS NOTED OTHERWISE.
7. DOORS AND FRAMES TO BE REINFORCED FOR DOOR CLOSURES.
8. HM FRAMES TO BE ONE PIECE WELDED.
9. DOOR HARDWARE AND SECURITY REQUIREMENTS TO BE REVIEWED WITH AND COORDINATED WITH ELECTRICAL REQUIREMENTS.
10. PROVIDE SUBMITTALS, SAMPLES AND SHOP DRAWINGS IN ACCORDANCE WITH SPECIFICATION REQUIREMENTS.
11. REFER TO MECHANICAL DRAWINGS FOR ALL REQUIRED DOOR GRILLES AND UNDERCUT DOOR LOCATIONS AND SIZES.
12. PROVIDE LEAD-LINED HARDWARE ITEMS FOR LEAD-LINED HARDWARE TYPES.

SECURITY REQUIREMENTS

AA: AUDIBLE ALARM
CR: CARD READER
DC: DOOR CONTACT
DL: ARMOURED DOOR LOOP
EH: ELECTRIFIED HINGE
ES: ELECTRIC STRIKE
GB: GANG BOX
LC: PROGRAMMABLE LOGIC CONTROLLER
JB: JUNCTION BOX
MD: EGRESS MOTION DETECTOR
OT: OPTICAL TURNSTILE
REX: 'REQUEST TO EXIT' BUTTON
SC: SECURITY CAMERA

REFER TO ELECTRICAL REQUIREMENTS.

1 A-004 DOOR FRAME AND HARDWARE SCHEDULE
SCALE: NTS

MILLWORK, FIXTURES & ACCESSORIES SCHEDULE

ITEM	DESCRIPTION	QTY	MODEL	RESPONSIBILITY	NOTES
MILLWORK & SHELVING					
MW-1	COUNTER/BASE/UPPER	1	MODULAR STAINLESS STEEL CASEWORK SYSTEM	CNS / CNI	REFER TO SPEC AND DETAILS. (SS COUNTER WITH RAISED EDGE, INTEGRATED SS SINK, SS UPPERS WITH TASK LIGHT BELOW)
MW-2	COUNTER/BASE/UPPER	1	CUSTOM MILLWORK.	CNS / CNI	REFER TO SPEC AND DETAILS. (BASE WITH DRAWERS), ALL HINGES AND DRAWERS TO BE SOFT CLOSE TYP.
MW-3	FIXED COUNTER AND HEIGHT ADJUSTABLE DESK	1	CUSTOM MILLWORK.	CNS / CNI	REFER TO SPEC AND DETAILS. SEE AH-1.
MW-4	COUNTER/BASE/UPPER	1	CUSTOM MILLWORK.	CNS / CNI	REFER TO SPEC AND DETAILS, ALL HINGES AND DRAWERS TO BE SOFT CLOSE TYP.
MW-5	STORAGE CABINET/COUNTER/BASE	1	CUSTOM MILLWORK.	CNS / CNI	REFER TO SPEC AND DETAILS, ALL HINGES AND DRAWERS TO BE SOFT CLOSE TYP.
MW-6	BENCH SEAT (BARIATRIC)/DRAWERS	1	CUSTOM MILLWORK.	CNS / CNI	REFER TO SPEC AND DETAILS
PLUMBING FIXTURES					
LV-1	LAVATORY & FAUCET	1	REFER TO MECHANICAL	CNS / CNI	WALL MOUNT C/W IN-WALL CARRIER & SHROUD. WITH AUTO FAUCET.
LV-2	LAVATORY & FAUCET	1	REFER TO MECHANICAL	CNS / CNI	WALL MOUNT HAND WASH SINK C/W IN-WALL CARRIER & SHROUD. WITH AUTO FAUCET.
LV-3	LAVATORY & FAUCET	1	REFER TO MECHANICAL	CNS / CNI	CORIAN SINK (805P - GLACIER WHITE) INTEGRAL TO COUNTER. MANUAL DECK-MOUNT FAUCET.
LV-4	LAVATORY & FAUCET	1	REFER TO MECHANICAL	CNS / CNI	SS SINK (18" W X 16" L X 9" D) INTEGRAL TO STAINLESS STEEL COUNTER. MANUAL DECK-MOUNT FAUCET.
WC-1	WATER CLOSET	1	REFER TO MECHANICAL	CNS / CNI	WALL MOUNT C/W IN-WALL CARRIER.
EW-1	EYE WASH STATION	1	REFER TO MECHANICAL	CNS / CNI	RECESSED FOLD DOWN EYE WASH.
FIXTURES & ACCESSORIES					
BR-1	BUMP/CHAIR RAIL	-	C-S GROUP FR-225N (949 WHITE)	CNS / CNI	WALL MOUNT. PROVIDE BLOCKING AS REQUIRED. COORD. MOUNTING HEIGHT ON SITE WITH CH-1 SPECIFIED HEIGHT. REFER TO PLAN FOR LOCATIONS AND EXTENT OF CHAIR RAIL.
AH-1	ADJUSTABLE HEIGHT TABLE BASE	1	RICHILIEU 50078290	CNS / CNI	BLACK. SEE MW-3
CM-1	CABLE MANAGEMENT TRAY	1	ERGONOFIS CABLE MANAGEMENT SOLUTION OR APPROVED ALTERNATE. QTY 1, 58" L, BLACK, LOCATED AT MW-3	CNS / CNI	COORDINATE WITH OWNER REQUIREMENTS.
MG-1	MED GAS PANEL	1	REFER TO MECHANICAL	CNS / CNI	WALL MOUNT. RECESSED.
O-1	OXYGEN (MED GAS OUTLET)	1	REFER TO MECHANICAL	CNS / CNI	WALL MOUNT.
MV-1	MEDICAL VACCUM OUTLET	1	REFER TO MECHANICAL	CNS / CNI	WALL MOUNT.
CG-1	CORNER GUARD	7	C-S GROUP CO-8	CNS / CNI	WALL MOUNT. SIZE: 2"X2"XHEIGHT OF WALL PROTECTION OR IF NO WP 2"x2"x48"H.
GB-1	L-SHAPED GRAB BAR (W/C)	1	BOBRICK - B-5898.99	CNS / CNI	90 DEGREE GRAB BAR, 1-1/4" DIAMETER, 30" X 30", SATIN FINISH STAINLESS STEEL - PEENED FINISH. PROVIDE BLOCKING AS REQUIRED.
GB-2	HORIZONTAL GRAB BAR (W/C)	1	BOBRICK - B-5806.99 x 24	CNS / CNI	STRAIGHT GRAB BAR, 1-1/4" DIAMETER, 24" LENGTH, SATIN FINISH STAINLESS STEEL - PEENED FINISH. PROVIDE BLOCKING AS REQUIRED.
HD-1	HAND SANITIZER DISPENSER	3	OWNER TO SPECIFY	OWS / CNI	WALL MOUNTED. COORDINATE LOCATIONS WITH OWNER.
OL-1	OVERHEAD LIFT	1	HANDICARE A SERIES CEILING LIFT, MODEL A-625 (MANUFACTURED BY SAVARIA), 324201 MANUAL TRAVERSE	CNS / CNI	REFER TO SAVARIA DRAWINGS IN SPECIFICATIONS AND CASH ALLOWANCE FOR PATIENT LIFT AND ABOVE CEILING SUPPORT REQUIREMENTS. CONTRACTOR TO COORDIANTE FINAL LIFT TRACK LAYOUT WITH ALL APPLICABLE SUBCONSULANTS AND VENDOR PRIOR TO INSTALLATION AND COORDINATE INSTALL WITH CGMH AND THE VENDOR. PROVIDE PATIENT LIFT VENDOR SHOP DRAWINGS STAMPED BY A STRUCTURAL ENGINEER REGISTERED IN THE PROVINCE OF ONTARIO.
PD-1	PAPER TOWEL DISPENSER	4	OWNER TO SPECIFY	OWS / CNI	WALL MOUNTED. PROVIDE IN-WALL BLOCKING AS REQUIRED. COORDINATE W/ OWNER
RH-1	ROBE HOOK	1	BOBRICK - B-983	CNS / CNI	SURFACE MOUNTED COAT HOOK, VANDAL AND LIGATURE RESISTANT, SATIN FINISH. PROVIDE BLOCKING AS REQUIRED.
PS-1	PRIVACY SCREEN	1	SILENTIA FOLDABLE PRIVACY SCREEN	CNS / CNI	SECURED TO WALL. PROVIDE IN-WALL BLOCKING AS REQUIRED
RS-1	ROLLER SHADE	1	SOLARFECTIVE/LEGRAND TELESHADE SF-T1, MANUAL CHAIN OPERATIED. FABRIC: WHITE/LINEN 3% OPENING.	CNS / CNI	SIZE TO SUIT FINISHED OPENING WIDTH X HEIGHT. REFER TO SPECIFICATIONS.
SD-1	SOAP DISPENSER	4	OWNER TO SPECIFY	OWS / CNI	WALL MOUNT. PROVIDE BLOCKING AS REQUIRED. COORDINATE W/ OWNER.
TD-1	TOILET TISSUE DISPENSER	1	OWNER TO SPECIFY	OWS / CNI	WALL MOUNT. PROVIDE IN-WALL BLOCKING AS REQUIRED. COORDINATE W/ OWNER
TM-1	TILT MIRROR	1	FROST 941-2436FT, 24"Wx36"H.	CNS / CNI	WALL MOUNT. PROVIDE IN-WALL BLOCKING AS REQUIRED
SN-1	SANITARY NAPKIN DISPOSAL	1	OWNER TO SPECIFY	OWS / CNI	WALL MOUNT. PROVIDE IN-WALL BLOCKING AS REQUIRED. COORDINATE W/ OWNER
TV-1	WALL MOUNTED TV	1	OWNER TO SPECIFY	OWS / CNI	WALL MOUNTED. PROVIDE IN-WALL BLOCKING AS REQUIRED. COORDINATE W/ OWNER
FURNITURE					
CH-1	WAITING CHAIR	8	BY OTHERS	OWS / OWI	NOT FIXED.
CH-2	INFUSION CHAIR	1	BY OTHERS	OWS / OWI	NOT FIXED.
CH-3	TASK CHAIR	2	BY OTHERS	OWS / OWI	MOBILE.
WS-1	WORKSTATION (MOBILE)	1	BY OTHERS	OWS / OWI	MOBILE.
LK-1	LOCKER	2	OWNER TO SPECIFY	OWS / CNI	2-TIER LOCKER. CONTRACTOR TO ASSEMBLE AND INSTALL. PROVIDE IN-WALL BLOCKING AS REQUIRED AND SECURE LOCKERS TO WALL. COORDINATE W/ OWNER.

NOTES:
1. OWS = OWNER SUPPLY; OWI = OWNER INSTALL; CNS = CONTRACTOR SUPPLY; CNI = CONTRACTOR INSTALL; EVI = EQUIPMENT VENDOR INSTALL.
2. SECURITY DEVICES / CODE WHITE BY OWNER.
3. REFER TO DRAWINGS AND SPECIFICATIONS FOR QUANTITIES AND LOCATIONS. CONTRACTOR TO PROVIDE IN-WALL BLOCKING FOR ALL WALL MOUNTED FIXTURES AS REQUIRED. CONTRACTOR TO COORDINATE EXACT LOCATIONS ON SITE.
4. REFER TO MECHANICAL AND ELECTRICAL REQUIREMENTS.

2 A-004 ACCESSORIES SCHEDULE
SCALE: NTS

NO.	DATE	ISSUED
06	2026/01/06	ISSUED FOR TENDER
05	2025/12/11	ISSUED FOR 90% CD
04	2025/12/09	ISSUED FOR PERMIT
03	2025/10/15	ISSUED FOR 50% CD
02	2025/10/10	ISSUED FOR CLIENT REVIEW
01	2025/06/06	ISSUED FOR 100% DD

NOTES

CONTRACTOR MUST CHECK AND VERIFY ALL DIMENSIONS SHOWN ON DRAWINGS WITH SITE CONDITIONS, PRIOR TO THE WORK AND NOTIFY THE ARCHITECT OF DIFFERENCES. AWAIT CLARIFICATION BEFORE CONTINUING.

DO NOT SCALE DRAWINGS.

ALL DRAWINGS, SPECIFICATIONS AND RELATED DOCUMENTS ARE THE COPYRIGHT PROPERTY OF THE ARCHITECT AND MUST BE RETURNED UPON REQUEST. REPRODUCTION OF DRAWINGS, SPECIFICATIONS AND RELATED DOCUMENTS IN PART OR IN WHOLE IS FORBIDDEN WITHOUT THE ARCHITECT'S WRITTEN PERMISSION.

THESE DRAWINGS ARE FOR PERMIT PURPOSES ONLY. THEY INDICATE DESIGN INTENT ONLY AND DO NOT FULLY DESCRIBE OR SPECIFY ALL CONDITIONS, MATERIAL OR ASSEMBLIES. REQUEST FURTHER INFORMATION FROM ARCHITECT PRIOR TO COMMENCING CONSTRUCTION AS REQUIRED.

ARCHITECT:
CARTER AI
DAVID CARTER ARCHITECTS INC.
688 Richmond Street West, Suite 303,
Toronto Ontario Canada M6J 1C5 | 416 977 6300

MECHANICAL AND ELECTRICAL ENGINEERING:
QUASAR
250 Rowntree Dairy Road Woodbridge, ON L4L 9J7

STRUCTURAL ENGINEERING:
HONEYCOMB
A MEMBER OF BPA
133 Richmond St W, Suite 302, Toronto, ON M5H 2L3

CLIENT:
COLLINGWOOD G&M HOSPITAL

NUCLEAR MEDICINE SPECT/CT SUITE
COLLINGWOOD GENERAL AND MARINE HOSPITAL
459 HUME STREET, COLLINGWOOD ON

PROJECT NORTH

DOOR, HARDWARE, AND ACCESSORIES SCHEDULES

ENTERED: JM
CHECKED: DC
DATE: 2025/04/23
PROJECT NO.
24-200
DRAWING NO.
A004

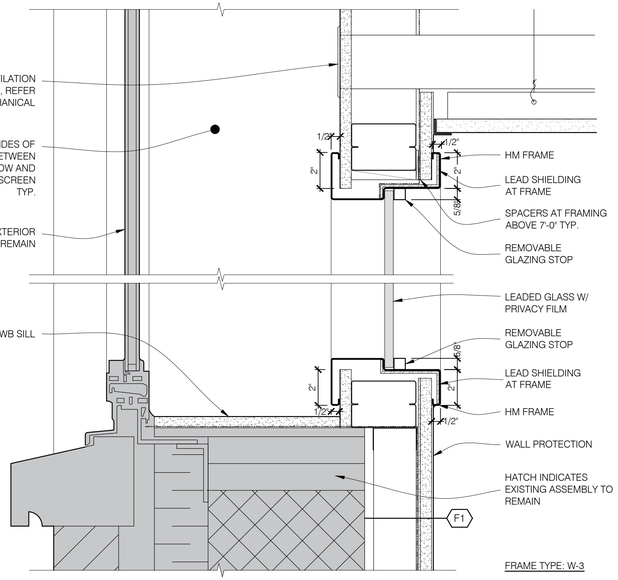

FRAME TYPE: W-3

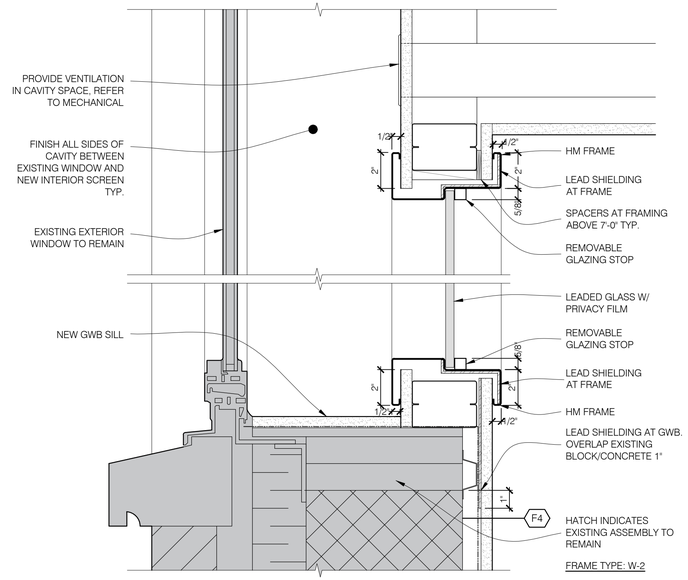

FRAME TYPE: W-2

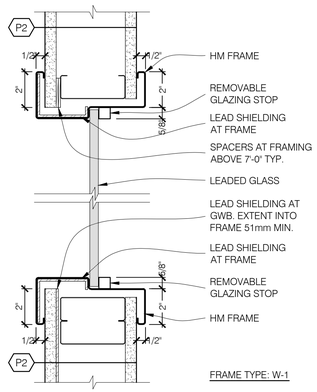

FRAME TYPE: W-1

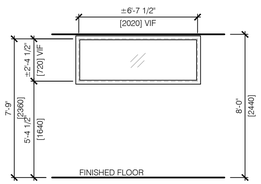

S-03

NEW 1/32" [0.8mm MIN.] LAMINATED LEADED-GLASS PANEL C/W PRIVACY FILM WF-1 (1/2" TOTAL GLASS THICKNESS)

-GLASS SIZE:
±2020mm W x ±720mm H

-FRAME TYPE: W-3

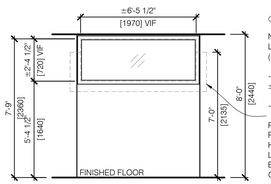

S-02

NEW 1/32" [0.8mm MIN.] LAMINATED LEADED-GLASS PANEL C/W PRIVACY FILM WF-1 (1/2" TOTAL GLASS THICKNESS)

-GLASS SIZE:
±1970mm W x ±720mm H

-FRAME TYPE: W-2

PROVIDE LEAD SHIELDING AROUND THE PERIMETER OF THE NEW INTERIOR SCREENS TO A HEIGHT OF 7'-0" (2.1m) ABOVE FINISHED FLOOR. LEAD THICKNESS TO MATCH THE GLAZING LEAD EQUIVALENCY. LAP SHIELDING A MINIMUNM OF 1" ONTO ADJACENT CONCRETE OR BLOCK, TYPICAL.

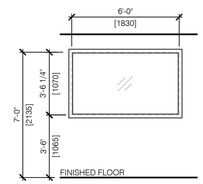

S-01

NEW 1/16" [1.6mm MIN.] LAMINATED LEADED-GLASS LITE (APPROX. 1/2" TOTAL GLASS THICKNESS)

-GLASS SIZE:
1830mm W x 1070mm H

-FRAME TYPE: W-1

1 / A-005 INTERIOR SCREEN SCHEDULE
SCALE: NTS

NO.	DATE	ISSUED
06	2026/01/06	ISSUED FOR TENDER
05	2025/12/11	ISSUED FOR 90% CD
04	2025/12/09	ISSUED FOR PERMIT
03	2025/10/15	ISSUED FOR 50% CD
02	2025/10/10	ISSUED FOR CLIENT REVIEW
01	2025/06/06	ISSUED FOR 100% DD

NOTES

CONTRACTOR MUST CHECK AND VERIFY ALL DIMENSIONS SHOWN ON DRAWINGS WITH SITE CONDITIONS, PRIOR TO THE WORK AND NOTIFY THE ARCHITECT OF DIFFERENCES. AWAIT CLARIFICATION BEFORE CONTINUING.

DO NOT SCALE DRAWINGS.

ALL DRAWINGS, SPECIFICATIONS AND RELATED DOCUMENTS ARE THE COPYRIGHT PROPERTY OF THE ARCHITECT AND MUST BE RETURNED UPON REQUEST. REPRODUCTION OF DRAWINGS, SPECIFICATIONS AND RELATED DOCUMENTS IN PART OR IN WHOLE IS FORBIDDEN WITHOUT THE ARCHITECT'S WRITTEN PERMISSION.

THESE DRAWINGS ARE FOR PERMIT PURPOSES ONLY. THEY INDICATE DESIGN INTENT ONLY AND DO NOT FULLY DESCRIBE OR SPECIFY ALL CONDITIONS, MATERIAL OR ASSEMBLIES. REQUEST FURTHER INFORMATION FROM ARCHITECT PRIOR TO COMMENCING CONSTRUCTION AS REQUIRED.

ARCHITECT:
CARTER AI
DAVID CARTER ARCHITECTS INC.
688 Richmond Street West, Suite 303,
Toronto Ontario Canada M6J 1C5 | 416 977 6300

MECHANICAL AND ELECTRICAL ENGINEERING:
QUASAR
250 Rowntree Dairy Road Woodbridge, ON L4L 9J7

STRUCTURAL ENGINEERING:
HONEYCOMB
A MEMBER OF BPA
133 Richmond St W, Suite 302, Toronto, ON M5H 2L3

CLIENT:
COLLINGWOOD G&M HOSPITAL

NUCLEAR MEDICINE SPECT/CT SUITE
COLLINGWOOD GENERAL AND MARINE HOSPITAL
459 HUME STREET, COLLINGWOOD ON

PROJECT NORTH

INTERIOR SCREEN SCHEDULE

ENTERED: JM
CHECKED: DC
DATE: 2025/04/23
PROJECT NO. 24-200

DRAWING NO. A005

DEMOLITION NOTES

1. ITEMS SHOWN DASHED ARE TO BE REMOVED UNLESS OTHERWISE INDICATED.
2. CONTRACTOR TO SITE VERIFY ALL DIMENSIONS. REPORT ANY DISCREPANCIES TO CONSULTANT FOR CLARIFICATION.
3. PRIOR TO DEMOLITION WORK: a) REFER TO HAZARDOUS MATERIALS ASSESSMENT REPORTS FOR ALL MATERIALS CONTAINING HAZARDOUS SUBSTANCES, b) REFER TO SPECIFICATION DIVISION 2 FOR RELATED ABATEMENT PROCEDURES AT ALL AREAS OF WORK, c) REFER TO REQUIRED OWNER POLICIES AND PROCEDURES.
4. REFER TO CGMH INFECTION PREVENTION AND CONTROL 'PREVENTIVE MEASURES ANALYSIS FORM FOR CONSTRUCTION/RENOVATIONS REQUIREMENTS IN SPECIFICATIONS FOR REQUIREMENTS IN ADDITION TO THOSE NOTED HERE, INCLUDING ANTE ROOMS. NOTE THAT THIS PROJECT MEETS THE CLASSIFICATION REQUIREMENTS FOR A PATIENT RISK CLASS II /III, GIVEN THE TYPE OF CONSTRUCTION ACTIVITY, THE DISTURBANCE TO POPULATION RISK GROUPS AND CONSTRUCTION DURATION. REFER TO REQUIREMENTS OUTLINED IN SPECIFICATIONS FOR INFECTION CONTROL PRECAUTIONS AND PROCEDURES.
5. PROVIDE TEMPORARY HOARDING AND DUST PROTECTION (EXTENDING FROM FLOOR TO UNDERSIDE SLAB ABOVE) DURING THE WORK TO PROTECT EXISTING ADJACENT AREAS THAT ARE TO REMAIN OPERATIONAL AND TO MAINTAIN BUILDING EGRESS AND EXIT ROUTES. REFER TO SPECIFICATIONS FOR PROTECTION REQUIREMENTS AND COMPLY WITH OWNER'S INFECTION PREVENTION AND CONTROL REQUIREMENTS FOR PROTECTION. COORDINATE TEMPORARY HOARDING AND DUST PROTECTION TO MAINTAIN EFFECTIVE BARRIER BETWEEN CONSTRUCTION ACTIVITIES AND OPERATIONAL AREAS AT ALL TIMES DURING THE PERFORMANCE OF THE WORK. MAINTAIN ACCESS TO AND EGRESS THROUGH EXISTING CORRIDOR AND PROVIDE CLEAR PASSAGE AT ALL TIMES THROUGHOUT CONSTRUCTION.
6. REFER TO SPECIFICATIONS FOR SHUT-DOWN PROCEDURES. PROVIDE ADVANCE NOTICE AS REQUIRED.
7. CONTRACTOR TO FULLY ASSESS EXISTING CONDITIONS AT TIME OF BID.
8. REFER TO AND COORDINATE WITH STRUCTURAL, MECHANICAL AND ELECTRICAL DEMOLITION REQUIREMENTS.
9. AT AREAS INDICATED TO RECEIVE NEW FLOOR FINISHES, REMOVE EXISTING FLOOR FINISH AND WALL BASE. SCRAPE AND PREPARE SUBSTRATE AS REQUIRED TO OBTAIN SMOOTH AND LEVEL SURFACE READY TO RECEIVE NEW FLOOR FINISHES AS AND WHERE SPECIFIED. CLEAN AND LEVEL EXISTING CONCRETE SUBSTRATE, INCLUDING ANY IRREGULARITIES AND PHYSICAL RESIDUE, AND FILL DEPRESSIONS AND CRACKS WITH FLOOR LEVELLING COMPOUND. REMOVE ANY EXISTING MATERIAL, ADHESIVES, OIL OR DUST THAT MAY BE DETRIMENTAL TO THE BONDING OF THE NEW FLOORING. TELEGRAPHING OF SUBSTRATE THROUGH TO NEW FLOORING IS NOT PERMITTED. USE SELF-LEVELLING MORTAR IN AREAS THAT NEED TO BE BUILT UP TO MATCH EXISTING FLOOR LEVELS. CONTRACTOR TO ENSURE FLOOR IS TRUE AND LEVEL TO MEET THE REQUIREMENTS OF THE NEW WORK. MAKE GOOD FLOOR SUBSTRATES WHERE EXISTING PARTITIONS HAVE BEEN DEMOLISHED, TYP.
10. REMOVE AND DISPOSE OF EXISTING CONCRETE MASONRY UNIT PARTITIONS INDICATED, COMPLETE WITH ASSOCIATED WALL BASE, HANDRAILS/BUMPERS AND CORNER GUARDS, WHERE INDICATED BY DASHED LINES. REPAIR ADJACENT WALLS AND FLOORS TO MAKE GOOD. REMOVE AND DISPOSE OF EXISTING DOORS, FRAMES AND HARDWARE WHERE INDICATED BY DASHED LINES.
11. REMOVE EXISTING ACT CEILINGS AS INDICATED. INCLUDE FOR TEMPORARY REMOVAL AND REINSTALLATION OF ACT PANELS AND GRIDS WHERE NOT INDICATED ON DRAWINGS, BUT AS REQUIRED TO ACCOMMODATE THE WORK OF ALL DISCIPLINES.
12. REFER TO ELECTRICAL REQUIREMENTS FOR REMOVAL, REINSTATEMENT AND/OR RELOCATION OF EXISTING CEILING FIXTURES SUCH AS LIGHTING, LIFE SAFETY DEVICES, CAMERAS, SPEAKERS, ETC.
13. REFER TO MECHANICAL DRAWINGS FOR REPLACEMENT OF EXISTING DIFFUSERS AND GRILLES.
14. REFER TO MECHANICAL PLUMBING DRAWINGS FOR DRAINAGE TO NEW FIXTURES AND REFER TO ELECTRICAL DRAWINGS FOR NEW UNDER-SLAB CONDUITS. CONTRACTOR TO SAW CUT EXISTING CONCRETE SLAB ON GRADE TO ACCOMODATE NEW MECHANICAL AND ELECTRICAL WORK.

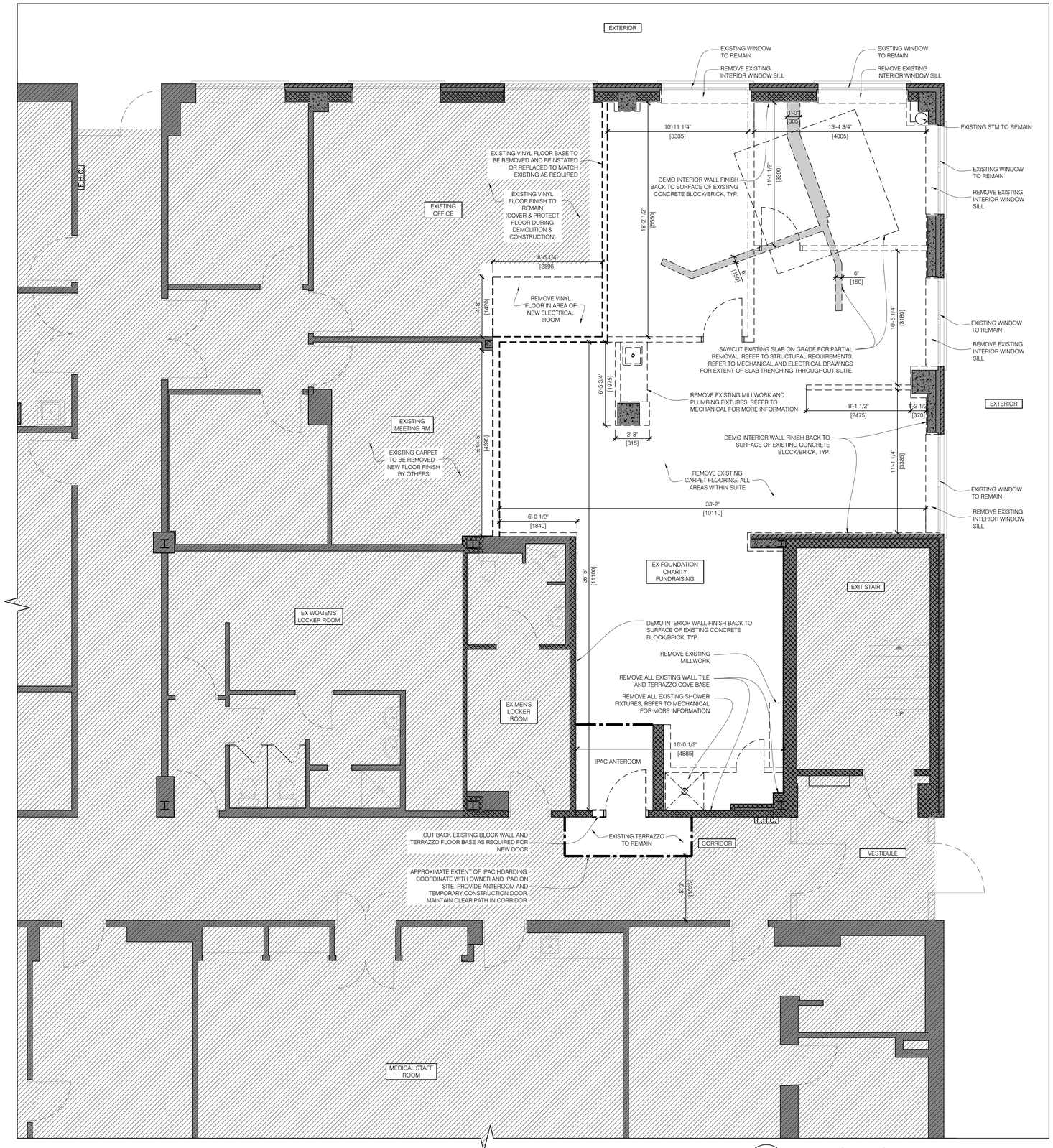

LEGEND

- EXISTING AREA OUT OF PROJECT SCOPE
- EXISTING WALLS TO REMAIN
- DASHED LINE GENERALLY INDICATES WORK PREVIOUSLY DEMOLISHED BY OWNER.
- BOLD DASHED LINE GENERALLY INDICATES WORK TO BE DEMOLISHED BY CONTRACTOR. CONTRACTOR TO FULLY ASSESS EXISTING CONDITIONS AT TIME OF BID.

01 / A101 DEMOLITION PLAN - LEVEL B1
1/4" = 1'-0"

NO.	DATE	ISSUED
06	2026/01/06	ISSUED FOR TENDER
05	2025/12/11	ISSUED FOR 90% CD
04	2025/12/09	ISSUED FOR PERMIT
03	2025/10/15	ISSUED FOR 50% CD
02	2025/10/10	ISSUED FOR CLIENT REVIEW
01	2025/06/06	ISSUED FOR 100% DD

NOTES

CONTRACTOR MUST CHECK AND VERIFY ALL DIMENSIONS SHOWN ON DRAWINGS WITH SITE CONDITIONS, PRIOR TO THE WORK AND NOTIFY THE ARCHITECT OF DIFFERENCES. AWAIT CLARIFICATION BEFORE CONTINUING.

DO NOT SCALE DRAWINGS.

ALL DRAWINGS, SPECIFICATIONS AND RELATED DOCUMENTS ARE THE COPYRIGHT PROPERTY OF THE ARCHITECT AND MUST BE RETURNED UPON REQUEST. REPRODUCTION OF DRAWINGS, SPECIFICATIONS AND RELATED DOCUMENTS IN PART OR IN WHOLE IS FORBIDDEN WITHOUT THE ARCHITECT'S WRITTEN PERMISSION.

THESE DRAWINGS ARE FOR PERMIT PURPOSES ONLY. THEY INDICATE DESIGN INTENT ONLY AND DO NOT FULLY DESCRIBE OR SPECIFY ALL CONDITIONS, MATERIAL OR ASSEMBLIES. REQUEST FURTHER INFORMATION FROM ARCHITECT PRIOR TO COMMENCING CONSTRUCTION AS REQUIRED.

ARCHITECT:
CARTER AI
DAVID CARTER ARCHITECTS INC.
688 Richmond Street West, Suite 303,
Toronto Ontario Canada M6J 1C5 | 416 977 6300

MECHANICAL AND ELECTRICAL ENGINEERING:
QUASAR
250 Rowntree Dairy Road Woodbridge, ON L4L 9J7

STRUCTURAL ENGINEERING:
HONEYCOMB
A MEMBER OF BPA
133 Richmond St W, Suite 302, Toronto, ON M5H 2L3

CLIENT:
COLLINGWOOD G&M HOSPITAL

NUCLEAR MEDICINE SPECT/CT SUITE
COLLINGWOOD GENERAL AND MARINE HOSPITAL
459 HUME STREET, COLLINGWOOD ON

PROJECT NORTH

DEMO FLOOR PLAN - LEVEL B1

ENTERED: JM
CHECKED: DC
DATE: 2025/04/23
PROJECT NO. 24-200

DRAWING NO. A101

DEMOLITION NOTES

1. ITEMS SHOWN DASHED ARE TO BE REMOVED UNLESS OTHERWISE INDICATED.
2. CONTRACTOR TO SITE VERIFY ALL DIMENSIONS. REPORT ANY DISCREPANCIES TO CONSULTANT FOR CLARIFICATION.
3. PRIOR TO DEMOLITION WORK: a) REFER TO HAZARDOUS MATERIALS ASSESSMENT REPORTS FOR ALL MATERIALS CONTAINING HAZARDOUS SUBSTANCES, b) REFER TO SPECIFICATION DIVISION 2 FOR RELATED ABATEMENT PROCEDURES AT ALL AREAS OF WORK, c) REFER TO REQUIRED OWNER POLICIES AND PROCEDURES.
4. REFER TO CGMH INFECTION PREVENTION AND CONTROL PREVENTIVE MEASURES ANALYSIS FORM FOR CONSTRUCTION/RENOVATIONS REQUIREMENTS IN SPECIFICATIONS FOR REQUIREMENTS IN ADDITION TO THOSE NOTED HERE, INCLUDING ANTE ROOMS. NOTE THAT THIS PROJECT MEETS THE CLASSIFICATION REQUIREMENTS FOR A PATIENT RISK CLASS II /III, GIVEN THE TYPE OF CONSTRUCTION ACTIVITY, THE DISTURBANCE TO POPULATION RISK GROUPS AND CONSTRUCTION DURATION. REFER TO REQUIREMENTS OUTLINED IN SPECIFICATIONS FOR INFECTION CONTROL PRECAUTIONS AND PROCEDURES.
5. PROVIDE TEMPORARY HOARDING AND DUST PROTECTION (EXTENDING FROM FLOOR TO UNDERSIDE SLAB ABOVE) DURING THE WORK TO PROTECT EXISTING ADJACENT AREAS THAT ARE TO REMAIN OPERATIONAL AND TO MAINTAIN BUILDING EGRESS AND EXIT ROUTES. REFER TO SPECIFICATIONS FOR PROTECTION REQUIREMENTS AND COMPLY WITH OWNER'S INFECTION PREVENTION AND CONTROL REQUIREMENTS FOR PROTECTION. COORDINATE TEMPORARY HOARDING AND DUST PROTECTION TO MAINTAIN EFFECTIVE BARRIER BETWEEN CONSTRUCTION ACTIVITIES AND OPERATIONAL AREAS AT ALL TIMES DURING THE PERFORMANCE OF THE WORK. MAINTAIN ACCESS TO AND EGRESS THROUGH EXISTING CORRIDOR AND PROVIDE CLEAR PASSAGE AT ALL TIMES THROUGHOUT CONSTRUCTION.
6. REFER TO SPECIFICATIONS FOR SHUT-DOWN PROCEDURES. PROVIDE ADVANCE NOTICE AS REQUIRED.
7. CONTRACTOR TO FULLY ASSESS EXISTING CONDITIONS AT TIME OF BID.
8. REFER TO AND COORDINATE WITH STRUCTURAL, MECHANICAL AND ELECTRICAL DEMOLITION REQUIREMENTS.
9. AT AREAS INDICATED TO RECEIVE NEW FLOOR FINISHES, REMOVE EXISTING FLOOR FINISH AND WALL BASE. SCRAPE AND PREPARE SUBSTRATE AS REQUIRED TO OBTAIN SMOOTH AND LEVEL SURFACE READY TO RECEIVE NEW FLOOR FINISHES AS AND WHERE SPECIFIED. CLEAN AND LEVEL EXISTING CONCRETE SUBSTRATE, INCLUDING ANY IRREGULARITIES AND PHYSICAL RESIDUE, AND FILL DEPRESSIONS AND CRACKS WITH FLOOR LEVELLING COMPOUND. REMOVE ANY EXISTING MATERIAL, ADHESIVES, OIL OR DUST THAT MAY BE DETRIMENTAL TO THE BONDING OF THE NEW FLOORING. TELEGRAPHING OF SUBSTRATE THROUGH TO NEW FLOORING IS NOT PERMITTED. USE SELF-LEVELLING MORTAR IN AREAS THAT NEED TO BE BUILT UP TO MATCH EXISTING FLOOR LEVELS. CONTRACTOR TO ENSURE FLOOR IS TRUE AND LEVEL TO MEET THE REQUIREMENTS OF THE NEW WORK. MAKE GOOD FLOOR SUBSTRATES WHERE EXISTING PARTITIONS HAVE BEEN DEMOLISHED, TYP.
10. REMOVE AND DISPOSE OF EXISTING CONCRETE MASONRY UNIT PARTITIONS INDICATED, COMPLETE WITH ASSOCIATED WALL BASE, HANDRAILS/BUMPERS AND CORNER GUARDS, WHERE INDICATED BY DASHED LINES. REPAIR ADJACENT WALLS AND FLOORS TO MAKE GOOD. REMOVE AND DISPOSE OF EXISTING DOORS, FRAMES AND HARDWARE WHERE INDICATED BY DASHED LINES.
11. REMOVE EXISTING ACT CEILINGS AS INDICATED. INCLUDE FOR TEMPORARY REMOVAL AND REINSTALLATION OF ACT PANELS AND GRIDS WHERE NOT INDICATED ON DRAWINGS, BUT AS REQUIRED TO ACCOMMODATE THE WORK OF ALL DISCIPLINES.
12. REFER TO ELECTRICAL REQUIREMENTS FOR REMOVAL, REINSTATEMENT AND/OR RELOCATION OF EXISTING CEILING FIXTURES SUCH AS LIGHTING, LIFE SAFETY DEVICES, CAMERAS, SPEAKERS, ETC.
13. REFER TO MECHANICAL DRAWINGS FOR REPLACEMENT OF EXISTING DIFFUSERS AND GRILLES.
14. REFER TO MECHANICAL PLUMBING DRAWINGS FOR DRAINAGE TO NEW FIXTURES AND REFER TO ELECTRICAL DRAWINGS FOR NEW UNDER-SLAB CONDUITS. CONTRACTOR TO SAW CUT EXISTING CONCRETE SLAB ON GRADE TO ACCOMODATE NEW MECHANICAL AND ELECTRICAL WORK.

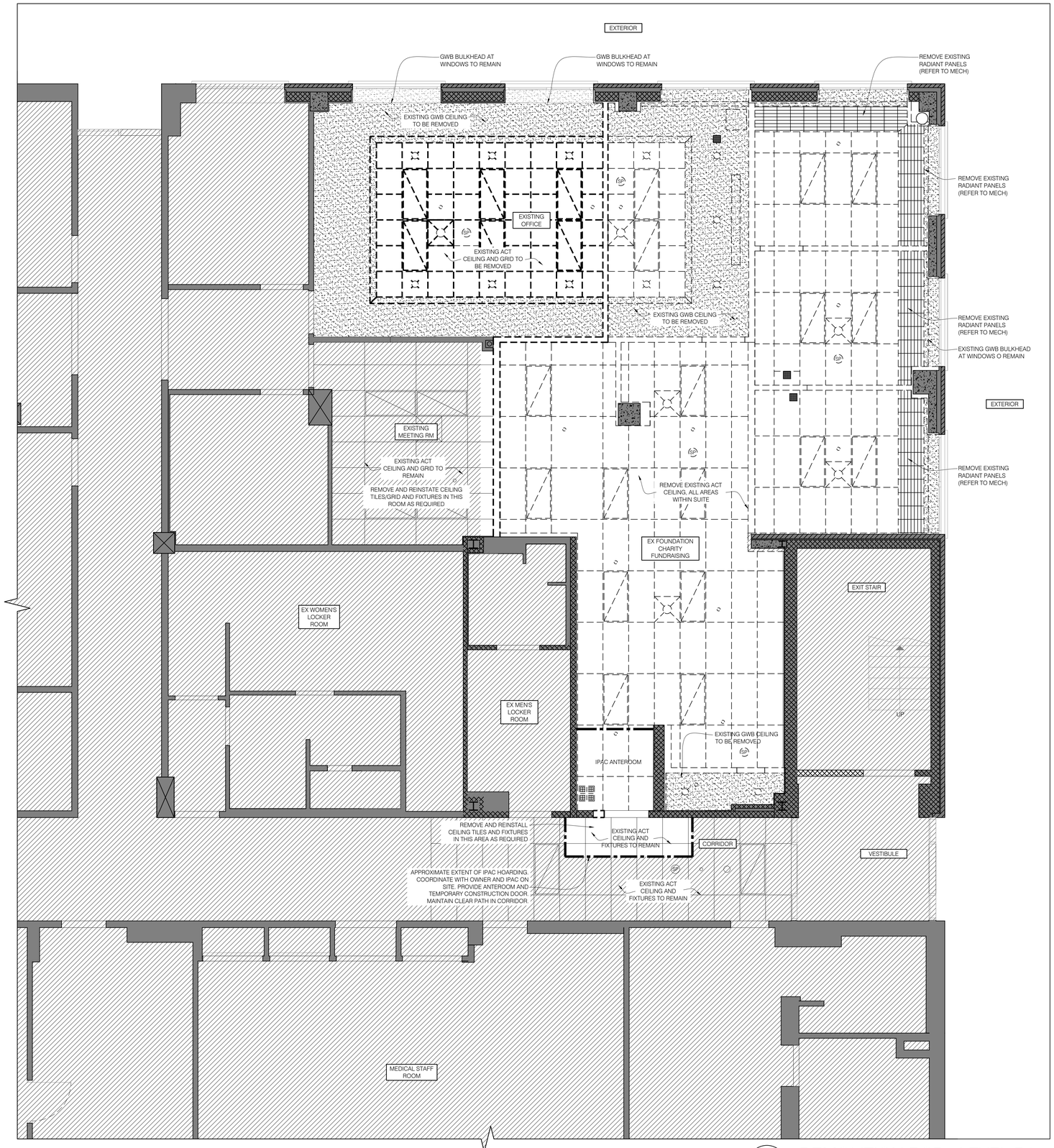

LEGEND

- EXISTING AREA OUT OF PROJECT SCOPE
- EXISTING WALLS TO REMAIN
- DASHED LINE GENERALLY INDICATES WORK PREVIOUSLY DEMOLISHED BY OWNER.
- BOLD DASHED LINE GENERALLY INDICATES WORK TO BE DEMOLISHED BY CONTRACTOR. CONTRACTOR TO FULLY ASSESS EXISTING CONDITIONS AT TIME OF BID.

01 / A102 DEMOLITION RCP - LEVEL B1
1/4" = 1'-0"

NO.	DATE	ISSUED
06	2026/01/06	ISSUED FOR TENDER
05	2025/12/11	ISSUED FOR 90% CD
04	2025/12/09	ISSUED FOR PERMIT
03	2025/10/15	ISSUED FOR 50% CD
02	2025/10/10	ISSUED FOR CLIENT REVIEW
01	2025/06/06	ISSUED FOR 100% DD

NOTES

CONTRACTOR MUST CHECK AND VERIFY ALL DIMENSIONS SHOWN ON DRAWINGS WITH SITE CONDITIONS, PRIOR TO THE WORK AND NOTIFY THE ARCHITECT OF DIFFERENCES. AWAIT CLARIFICATION BEFORE CONTINUING.

DO NOT SCALE DRAWINGS.

ALL DRAWINGS, SPECIFICATIONS AND RELATED DOCUMENTS ARE THE COPYRIGHT PROPERTY OF THE ARCHITECT AND MUST BE RETURNED UPON REQUEST. REPRODUCTION OF DRAWINGS, SPECIFICATIONS AND RELATED DOCUMENTS IN PART OR IN WHOLE IS FORBIDDEN WITHOUT THE ARCHITECT'S WRITTEN PERMISSION.

THESE DRAWINGS ARE FOR PERMIT PURPOSES ONLY. THEY INDICATE DESIGN INTENT ONLY AND DO NOT FULLY DESCRIBE OR SPECIFY ALL CONDITIONS, MATERIAL OR ASSEMBLIES. REQUEST FURTHER INFORMATION FROM ARCHITECT PRIOR TO COMMENCING CONSTRUCTION AS REQUIRED.

ARCHITECT:
CARTER AI
DAVID CARTER ARCHITECTS INC.
688 Richmond Street West, Suite 303,
Toronto Ontario Canada M6J 1C5 | 416 977 6300

MECHANICAL AND ELECTRICAL ENGINEERING:
QUASAR
250 Rowntree Dairy Road Woodbridge, ON L4L 9J7

STRUCTURAL ENGINEERING:
HONEYCOMB
A MEMBER OF BPA
133 Richmond St W, Suite 302, Toronto, ON M5H 2L3

CLIENT:
COLLINGWOOD G&M HOSPITAL

NUCLEAR MEDICINE SPECT/CT SUITE
COLLINGWOOD GENERAL AND MARINE HOSPITAL
459 HUME STREET, COLLINGWOOD ON

PROJECT NORTH

DEMO RCP - LEVEL B1

ENTERED: JM
CHECKED: DC
DATE: 2025/04/23
PROJECT NO. 24-200

DRAWING NO. A102

CONSTRUCTION NOTES

1. CONTRACTOR TO SITE VERIFY ALL DIMENSIONS. REPORT ANY DISCREPANCIES TO CONSULTANT FOR CLARIFICATION.
2. PRIOR TO CONSTRUCTION WORK: a) REFER TO HAZARDOUS MATERIALS ASSESSMENT REPORTS FOR ALL MATERIALS CONTAINING HAZARDOUS SUBSTANCES, b) REFER TO SPECIFICATION DIVISION 2 FOR RELATED ABATEMENT PROCEDURES AT ALL AREAS OF WORK, c) REFER TO REQUIRED OWNER POLICIES AND PROCEDURES.
3. REFER TO SPECIFICATIONS FOR REQUIREMENTS. PROVIDE ALL REQUIRED SHOP DRAWINGS.
4. ARCHITECTURAL DRAWINGS INDICATE PROPOSED PARTITION LAYOUT, TYPES AND BUILT-IN FEATURES. IT IS THE RESPONSIBILITY OF THE CONTRACTOR TO ENSURE PROPER COORDINATION WITH DOORS, DEVICES, MILLWORK, FIXTURES, FINISHES, EQUIPMENT AND FURNITURE.
5. REFER TO LEAD SHIELDING DIAGRAM, ASSEMBLIES SCHEDULE AND SPECIFICATIONS. PROVIDE ALL REQUIRED LEAD SHIELDING.
6. REFER TO AND COORDINATE WITH STRUCTURAL, MECHANICAL AND ELECTRICAL REQUIREMENTS.
7. REFER TO MILLWORK, FIXTURES AND ACCESSORIES SCHEDULE, AND REFER TO MILLWORK DETAILS FOR DETAILED REQUIREMENTS.
8. NEW FLOORING SHALL CONTINUE UNDER NEW MILLWORK, TYPICAL. REFER TO MILLWORK DETAILS.
9. CONTRACTOR TO COORDINATE AND PROVIDE IN-WALL BLOCKING AS REQUIRED TO SUPPORT PROPOSED MILLWORK, FIXTURES AND FITTINGS. REFER TO MILLWORK DETAILS FOR SPECIFIC REQUIREMENTS.
10. WHERE EXISTING SURFACES TO REMAIN ARE DISTURBED BY THE REMOVAL OF EXISTING WORK OR THE INSTALLATION OF NEW WORK, MAKE GOOD ALL SURFACES TO MATCH ADJACENT EXISTING SURFACES. PATCH EXISTING PARTITIONS AND PAINT AS NEEDED. REPAINT EXISTING PAINTED SURFACES COMPLETE TO THE NEAREST CHANGES IN PLANE TO MATCH EXISTING COLOURS AND SHEENS.
11. REFER TO MECHANICAL AND ELECTRICAL DRAWINGS FOR NEW CEILING FIXTURES AND LUMINAIRES.
12. PROVIDE FIRE STOPPING AND SMOKE SEALS AT EXISTING AND NEW SERVICE PENETRATIONS WITHIN THE AREA OF WORK AT VERTICAL FIRE SEPARATIONS INDICATED AND AT 2 HR FRR FLOOR ASSEMBLIES TYPICAL. REFER TO MECHANICAL AND ELECTRICAL DRAWINGS FOR SCOPE OF WORK AND PROVIDE REQUIRED FIRE STOPPING AND SMOKE SEALS AT PENETRATIONS THROUGH EXISTING FIRE SEPARATIONS, TYP. INFILL EXISTING ABANDONED CORE HOLES AT CONCRETE SLAB FLOOR WITH CONCRETE TYPICAL AT SERVICES TO BE REMOVED.
13. RELOCATE AND INSTALL OWNERS FIXTURES INDICATED ON DRAWINGS, ELEVATIONS AND MILLWORK, FIXTURES & FITTINGS SCHEDULE, INCLUDING ALL RELATED COMPONENTS AND ATTACHMENTS. REFER TO MECHANICAL AND ELECTRICAL REQUIREMENTS FOR OTHER ITEMS.
14. REFLECTED CEILING PLANS INDICATE LOCATIONS FOR CRITICAL CEILING COMPONENTS AND DEVICES. NOT ALL CEILING ELEMENTS OF ALL TRADES ARE SHOWN IN THE ARCHITECTURAL DRAWINGS. REFER TO MECHANICAL AND ELECTRICAL DRAWINGS AS THEY APPLY FOR FULL SCOPE OF WORK AND QUANTITIES.
15. CONTRACTOR TO LAYOUT PIPING, DUCTWORK AND OTHER MAJOR ELEMENTS IN CEILING PLENUM SPACE AND COORDINATE FOR ADEQUATE CLEARANCES FOR RECESSED CEILING DEVICES TO MAINTAIN LAYOUT AS INDICATED FOR ADEQUATE CLEARANCES FOR RECESSED CEILING DEVICES TO MAINTAIN LAYOUT AS INDICATED IN THE REFLECTED CEILING PLANS. ADVISE CONSULTANTS OF DISCREPANCIES WITH THE DIMENSIONED PLANS OR CONFLICTS WITH OTHER PARTS OF THE WORK. ADJUST AS REQUIRED BASED ON REVIEW.
16. LOCATE UN-DIMENSIONED SPRINKLER HEADS, SPEAKERS, LIGHT FIXTURES AND OTHER ITEMS IN THE CENTRE OF SUSPENDED ACOUSTIC CEILING TILES UNLESS OTHERWISE NOTED.
17. FINISH AND COLOUR OF ACCESS PANELS, HVAC DIFFUSER/REGISTERS, LIGHT FIXTURES, CEILING TRIM, SPEAKER GRILLES AND OTHER CEILING MOUNTED DEVICES TO MATCH SCHEDULED CEILING COLOUR UNLESS OTHERWISE NOTED.
18. REFER TO MECHANICAL PLUMBING DRAWINGS FOR DRAINAGE TO NEW FIXTURES. CONTRACTOR TO INFILL CONCRETE SLAB-ON-GRADE AS REQUIRED TO ACCOMMODATE THE WORK AND MAKE FLUSH NEW SURFACE READY TO ACCEPT NEW FLOORING.
19. REFER TO OWNER'S EQUIPMENT SUPPLIER DRAWINGS. LEVEL CT ROOM FLOOR TO REQUIRED TOLERANCE.
20. REFER TO ELECTRICAL DRAWINGS FOR PROPOSED UNDER-SLAB CONDUITS. SCAN AND CUT EXISTING CONCRETE SLAB-ON-GRADE TO ACCOMMODATE ELECTRICAL WORK. CONTRACTOR TO INFILL CONCRETE SLAB-ON-GRADE AS REQUIRED TO ACCOMMODATE THE WORK AND MAKE FLUSH NEW SURFACE READY TO ACCEPT NEW FLOORING.
21. CONTRACTOR TO INCLUDE FOR AN EXISTING FLOOR ELEVATION SURVEY IN THE CT SCAN ROOM AND FOR ALL REQUIRED LEVELING AND GRINDING TO ACHIEVE THE LEVELNESS INDICATED PER SIEMENS' DRAWINGS. ENSURE THE SCAN ROOM FLOOR IS LEVEL WITHIN THE REQUIRED TOLERANCES AND THAT THE FINISHED SURFACE IS SMOOTH AND SUITABLE FOR EQUIPMENT INSTALLATION.
22. IT IS RECOMMENDED THAT THE FLOOR OF THE ENTIRE CT SCAN ROOM BE LEVELED AND FLATTENED ACCORDING TO SPECIFICATION; IF THIS IS NOT POSSIBLE, IT IS IMPERATIVE THAT THE SYSTEM INSTALLATION AREA IS LEVELED AND FLATTENED (2369 X 5720 mm).
   - SLOPE: ±25 mm OVER 5720 mm.
   - FLATNESS: SURFACE MUST BE SMOOTH AND HAVE NO MORE THAN 3 mm DEVIATION IN ANY 1220 mm THROUGHOUT THE ROOM.
   - FLOOR SURFACE: FLOOR SHOULD HAVE ONE SINGLE POURED SURFACE - NO FILL MATERIAL SHOULD BE USED TO COMPENSATE FOR HOLES OR DEPRESSIONS IN THE FLOOR SURFACE.
   - UPON COMPLETION OF THE INSTALLATION FLOOR AREA, VERIFY THE SURFACE FLATNESS USING A STRAIGHT EDGE OF 1220 mm / 4' IN LENGTH (OR LONGER). ANY MEASUREMENT OUTSIDE OF ACCEPTABLE LIMITS MUST BE LEVELED WITH LEVELING COMPOUND. REFER TO OWNER'S EQUIPMENT VENDOR INSTALLATION DRAWINGS FOR MORE INFORMATION.

LEGEND

- EXISTING AREA OUT OF PROJECT SCOPE
- EXISTING WALLS TO REMAIN
- NEW WALLS
- NEW LEAD SHIELDING PROTECTION AT NEW INTERIOR PARTITIONS, DOORS AND FRAMES. REFER TO NOTES BELOW AND WALL ASSEMBLY SCHEDULE FOR MORE INFORMATION.

NOTES

1. PROVIDE NEW LEAD SHIELDING AT CT ROOM SIDE, TYPICAL.
2. PROVIDE NEW LEAD SHIELDING ADHERED TO GYPSUM BOARDS PANELS ON INSIDE FACE (WITHIN WALL CAVITY). REFER TO SPECIFICATIONS.
3. PROVIDE 50mm [2"] WIDE STRIPS OF SAME THICKNESS AS LEAD SHIELDING REQUIRED AT WALL BETWEEN METAL STUD AND LEAD SHIELDING AT GAPS BETWEEN LEAD PANELS.
4. PROVIDE 3/8" Ø LEAD DISCS OF SAME THICKNESS AS LEAD SHIELDING REQUIRED AT WALL TO COVER COUNTER SUNK SCREW HEADS, TYPICAL.
5. PROVIDE METAL DOORS AND FRAMES WITH LEAD SHIELDING OF SAME THICKNESS AS REQUIRED AT WALL.
6. PROVIDE LEADED GLASS LITE WITH LEAD SHIELDING EQUIVALENT TO LEAD SHIELDING THICKNESS REQUIRED AT WALL.
7. AT WALLS REQUIRING LEAD SHIELDING: PROVIDE LEAD SHIELDING OF SAME THICKNESS AS REQUIRED AT WALL, AT CORNERS; RECESSED FIXTURES; CUTOUTS AND PENETRATIONS.
8. LEAD LINING IN WALLS OF SPECT/CT AND ELECTRICAL ROOM TO BE INSTALLED UP TO 2.1m AFF, ALL OTHER ROOMS 1.8m AFF.
9. PROVIDE LEAD SHIELDING AROUND THE PERIMETER OF THE NEW INTERIOR SCREENS IN THE CT ROOM TO A HEIGHT OF 7'-0" (2.1m) ABOVE FINISHED FLOOR. LEAD THICKNESS TO MATCH THE GLAZING LEAD EQUIVALENCY. LAP SHIELDING A MINIMUNM OF 1" ONTO ADJACENT CONCRETE OR BLOCK, TYPICAL.

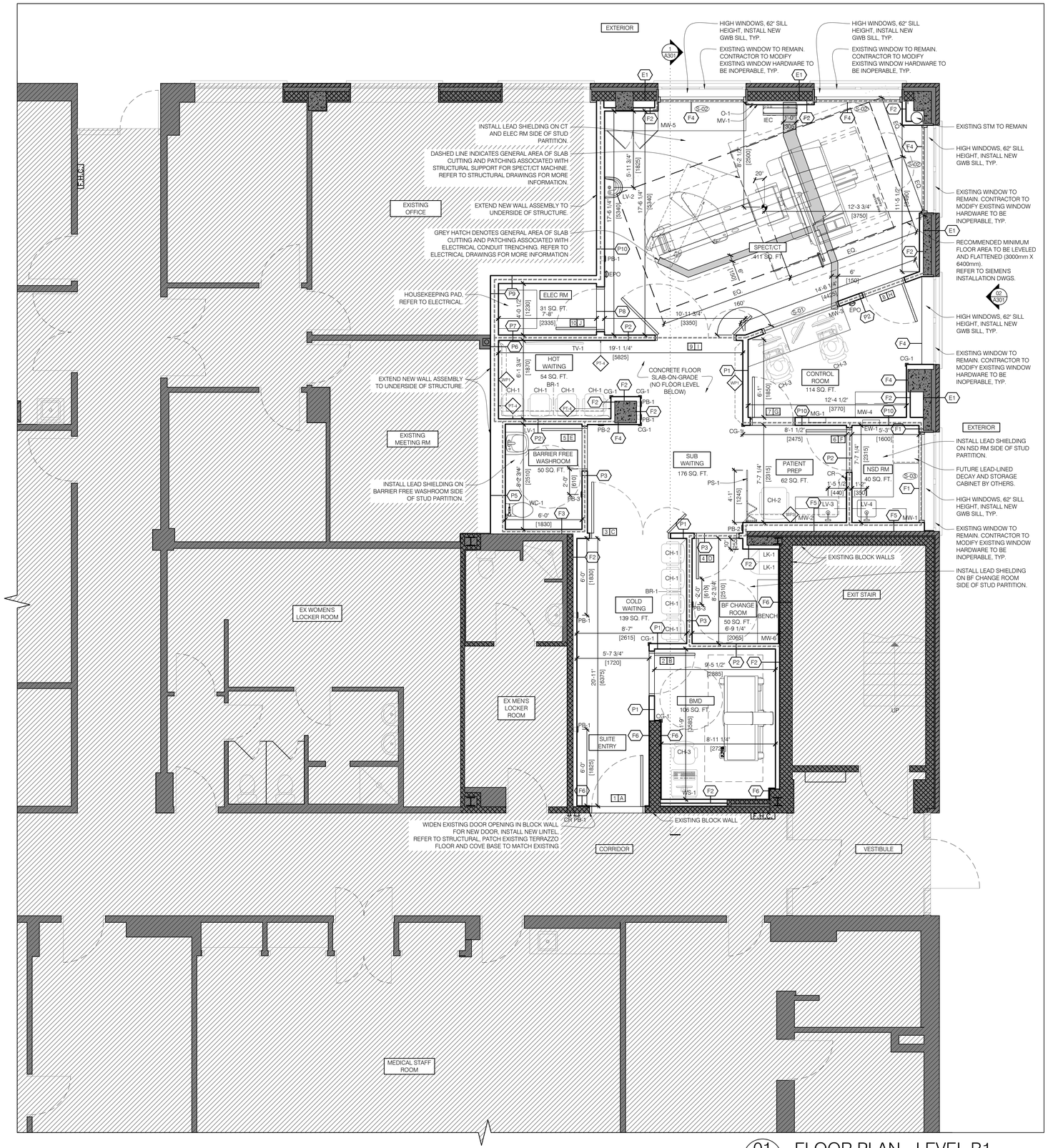

01 A201 FLOOR PLAN - LEVEL B1
1/4" = 1'-0"

NO.	DATE	ISSUED
06	2026/01/06	ISSUED FOR TENDER
05	2025/12/11	ISSUED FOR 90% CD
04	2025/12/09	ISSUED FOR PERMIT
03	2025/10/15	ISSUED FOR 50% CD
02	2025/10/10	ISSUED FOR CLIENT REVIEW
01	2025/06/06	ISSUED FOR 100% DD

NOTES

CONTRACTOR MUST CHECK AND VERIFY ALL DIMENSIONS SHOWN ON DRAWINGS WITH SITE CONDITIONS, PRIOR TO THE WORK AND NOTIFY THE ARCHITECT OF DIFFERENCES. AWAIT CLARIFICATION BEFORE CONTINUING.

DO NOT SCALE DRAWINGS.

ALL DRAWINGS, SPECIFICATIONS AND RELATED DOCUMENTS ARE THE COPYRIGHT PROPERTY OF THE ARCHITECT AND MUST BE RETURNED UPON REQUEST. REPRODUCTION OF DRAWINGS, SPECIFICATIONS AND RELATED DOCUMENTS IN PART OR IN WHOLE IS FORBIDDEN WITHOUT THE ARCHITECT'S WRITTEN PERMISSION.

THESE DRAWINGS ARE FOR PERMIT PURPOSES ONLY. THEY INDICATE DESIGN INTENT ONLY AND DO NOT FULLY DESCRIBE OR SPECIFY ALL CONDITIONS, MATERIAL OR ASSEMBLIES. REQUEST FURTHER INFORMATION FROM ARCHITECT PRIOR TO COMMENCING CONSTRUCTION AS REQUIRED.

ARCHITECT:
CARTER AI
DAVID CARTER ARCHITECTS INC.
688 Richmond Street West, Suite 303,
Toronto Ontario Canada M6J 1C5 | 416 977 6300

MECHANICAL AND ELECTRICAL ENGINEERING:
QUASAR
250 Rowntree Dairy Road Woodbridge, ON L4L 9J7

STRUCTURAL ENGINEERING:
HONEYCOMB
A MEMBER OF BPA
133 Richmond St W, Suite 302, Toronto, ON M5H 2L3

CLIENT:
COLLINGWOOD G&M HOSPITAL

NUCLEAR MEDICINE SPECT/CT SUITE
COLLINGWOOD GENERAL AND MARINE HOSPITAL
459 HUME STREET, COLLINGWOOD ON

PROJECT NORTH

PROPOSED FLOOR PLAN - LEVEL B1

ENTERED: JM
CHECKED: DC
DATE: 2025/04/23
PROJECT NO. 24-200

DRAWING NO. A201

CONSTRUCTION NOTES

1. CONTRACTOR TO SITE VERIFY ALL DIMENSIONS. REPORT ANY DISCREPANCIES TO CONSULTANT FOR CLARIFICATION.
2. PRIOR TO CONSTRUCTION WORK: a) REFER TO HAZARDOUS MATERIALS ASSESSMENT REPORTS FOR ALL MATERIALS CONTAINING HAZARDOUS SUBSTANCES, b) REFER TO SPECIFICATION DIVISION 2 FOR RELATED ABATEMENT PROCEDURES AT ALL AREAS OF WORK, c) REFER TO REQUIRED OWNER POLICIES AND PROCEDURES.
3. REFER TO SPECIFICATIONS FOR REQUIREMENTS. PROVIDE ALL REQUIRED SHOP DRAWINGS.
4. ARCHITECTURAL DRAWINGS INDICATE PROPOSED PARTITION LAYOUT, TYPES AND BUILT-IN FEATURES. IT IS THE RESPONSIBILITY OF THE CONTRACTOR TO ENSURE PROPER COORDINATION WITH DOORS, DEVICES, MILLWORK, FIXTURES, FINISHES, EQUIPMENT AND FURNITURE.
5. REFER TO LEAD SHIELDING DIAGRAM, ASSEMBLIES SCHEDULE AND SPECIFICATIONS. PROVIDE ALL REQUIRED LEAD SHIELDING.
6. REFER TO AND COORDINATE WITH STRUCTURAL, MECHANICAL AND ELECTRICAL REQUIREMENTS.
7. REFER TO MILLWORK, FIXTURES AND ACCESSORIES SCHEDULE, AND REFER TO MILLWORK DETAILS FOR DETAILED REQUIREMENTS.
8. NEW FLOORING SHALL CONTINUE UNDER NEW MILLWORK, TYPICAL. REFER TO MILLWORK DETAILS.
9. CONTRACTOR TO COORDINATE AND PROVIDE IN-WALL BLOCKING AS REQUIRED TO SUPPORT PROPOSED MILLWORK, FIXTURES AND FITTINGS. REFER TO MILLWORK DETAILS FOR SPECIFIC REQUIREMENTS.
10. WHERE EXISTING SURFACES TO REMAIN ARE DISTURBED BY THE REMOVAL OF EXISTING WORK OR THE INSTALLATION OF NEW WORK, MAKE GOOD ALL SURFACES TO MATCH ADJACENT EXISTING SURFACES. PATCH EXISTING PARTITIONS AND PAINT AS NEEDED. REPAINT EXISTING PAINTED SURFACES COMPLETE TO THE NEAREST CHANGES IN PLANE TO MATCH EXISTING COLOURS AND SHEENS.
11. REFER TO MECHANICAL AND ELECTRICAL DRAWINGS FOR NEW CEILING FIXTURES AND LUMINAIRES.
12. PROVIDE FIRE STOPPING AND SMOKE SEALS AT EXISTING AND NEW SERVICE PENETRATIONS WITHIN THE AREA OF WORK AT VERTICAL FIRE SEPARATIONS INDICATED AND AT 2 HR FRR FLOOR ASSEMBLIES TYPICAL. REFER TO MECHANICAL AND ELECTRICAL DRAWINGS FOR SCOPE OF WORK AND PROVIDE REQUIRED FIRE STOPPING AND SMOKE SEALS AT PENETRATIONS THROUGH EXISTING FIRE SEPARATIONS, TYP. INFILL EXISTING ABANDONED CORE HOLES AT CONCRETE SLAB FLOOR WITH CONCRETE TYPICAL AT SERVICES TO BE REMOVED.
13. RELOCATE AND INSTALL OWNER'S FIXTURES INDICATED ON DRAWINGS, ELEVATIONS AND MILLWORK, FIXTURES & FITTINGS SCHEDULE, INCLUDING ALL RELATED COMPONENTS AND ATTACHMENTS. REFER TO MECHANICAL AND ELECTRICAL REQUIREMENTS FOR OTHER ITEMS.
14. REFLECTED CEILING PLANS INDICATE LOCATIONS FOR CRITICAL CEILING COMPONENTS AND DEVICES. NOT ALL CEILING ELEMENTS OF ALL TRADES ARE SHOWN IN THE ARCHITECTURAL DRAWINGS. REFER TO MECHANICAL AND ELECTRICAL DRAWINGS AS THEY APPLY FOR FULL SCOPE OF WORK AND QUANTITIES.
15. CONTRACTOR TO LAYOUT PIPING, DUCTWORK AND OTHER MAJOR ELEMENTS IN CEILING PLENUM SPACE AND COORDINATE FOR ADEQUATE CLEARANCES FOR RECESSED CEILING DEVICES TO MAINTAIN LAYOUT AS INDICATED FOR ADEQUATE CLEARANCES FOR RECESSED CEILING DEVICES TO MAINTAIN LAYOUT AS INDICATED IN THE REFLECTED CEILING PLANS. ADVISE CONSULTANTS OF DISCREPANCIES WITH THE DIMENSIONED PLANS OR CONFLICTS WITH OTHER PARTS OF THE WORK. ADJUST AS REQUIRED BASED ON REVIEW.
16. LOCATE UN-DIMENSIONED SPRINKLER HEADS, SPEAKERS, LIGHT FIXTURES AND OTHER ITEMS IN THE CENTRE OF SUSPENDED ACOUSTIC CEILING TILES UNLESS OTHERWISE NOTED.
17. FINISH AND COLOUR OF ACCESS PANELS, HVAC DIFFUSER/REGISTERS, LIGHT FIXTURES, CEILING TRIM, SPEAKER GRILLES AND OTHER CEILING MOUNTED DEVICES TO MATCH SCHEDULED CEILING COLOUR UNLESS OTHERWISE NOTED.
18. REFER TO MECHANICAL PLUMBING DRAWINGS FOR DRAINAGE TO NEW FIXTURES. CONTRACTOR TO INFILL CONCRETE SLAB-ON-GRADE AS REQUIRED TO ACCOMMODATE THE WORK AND MAKE FLUSH NEW SURFACE READY TO ACCEPT NEW FLOORING.
19. REFER TO OWNER'S EQUIPMENT SUPPLIER DRAWINGS. LEVEL CT ROOM FLOOR TO REQUIRED TOLERANCE.
20. REFER TO ELECTRICAL DRAWINGS FOR PROPOSED UNDER-SLAB CONDUITS. SCAN AND CUT EXISTING CONCRETE SLAB-ON-GRADE TO ACCOMMODATE ELECTRICAL WORK. CONTRACTOR TO INFILL CONCRETE SLAB-ON-GRADE AS REQUIRED TO ACCOMMODATE THE WORK AND MAKE FLUSH NEW SURFACE READY TO ACCEPT NEW FLOORING.
21. CONTRACTOR TO INCLUDE FOR AN EXISTING FLOOR ELEVATION SURVEY IN THE CT SCAN ROOM AND FOR ALL REQUIRED LEVELING AND GRINDING TO ACHIEVE THE LEVELNESS INDICATED PER SIEMENS' DRAWINGS. ENSURE THE SCAN ROOM FLOOR IS LEVEL WITHIN THE REQUIRED TOLERANCES AND THAT THE FINISHED SURFACE IS SMOOTH AND SUITABLE FOR EQUIPMENT INSTALLATION.
22. IT IS RECOMMENDED THAT THE FLOOR OF THE ENTIRE CT SCAN ROOM BE LEVELED AND FLATTENED ACCORDING TO SPECIFICATION; IF THIS IS NOT POSSIBLE, IT IS IMPERATIVE THAT THE SYSTEM INSTALLATION AREA IS LEVELED AND FLATTENED (2369 X 5720 mm).
   - SLOPE: ±25 mm OVER 5720 mm.
   - FLATNESS: SURFACE MUST BE SMOOTH AND HAVE NO MORE THAN 3 mm DEVIATION IN ANY 1220 mm THROUGHOUT THE ROOM.
   - FLOOR SURFACE: FLOOR SHOULD HAVE ONE SINGLE POURED SURFACE - NO FILL MATERIAL SHOULD BE USED TO COMPENSATE FOR HOLES OR DEPRESSIONS IN THE FLOOR SURFACE.
   - UPON COMPLETION OF THE INSTALLATION FLOOR AREA, VERIFY THE SURFACE FLATNESS USING A STRAIGHT EDGE OF 1220 mm / 4' IN LENGTH (OR LONGER). ANY MEASUREMENT OUTSIDE OF ACCEPTABLE LIMITS MUST BE LEVELED WITH LEVELING COMPOUND. REFER TO OWNER'S EQUIPMENT VENDOR INSTALLATION DRAWINGS FOR MORE INFORMATION.

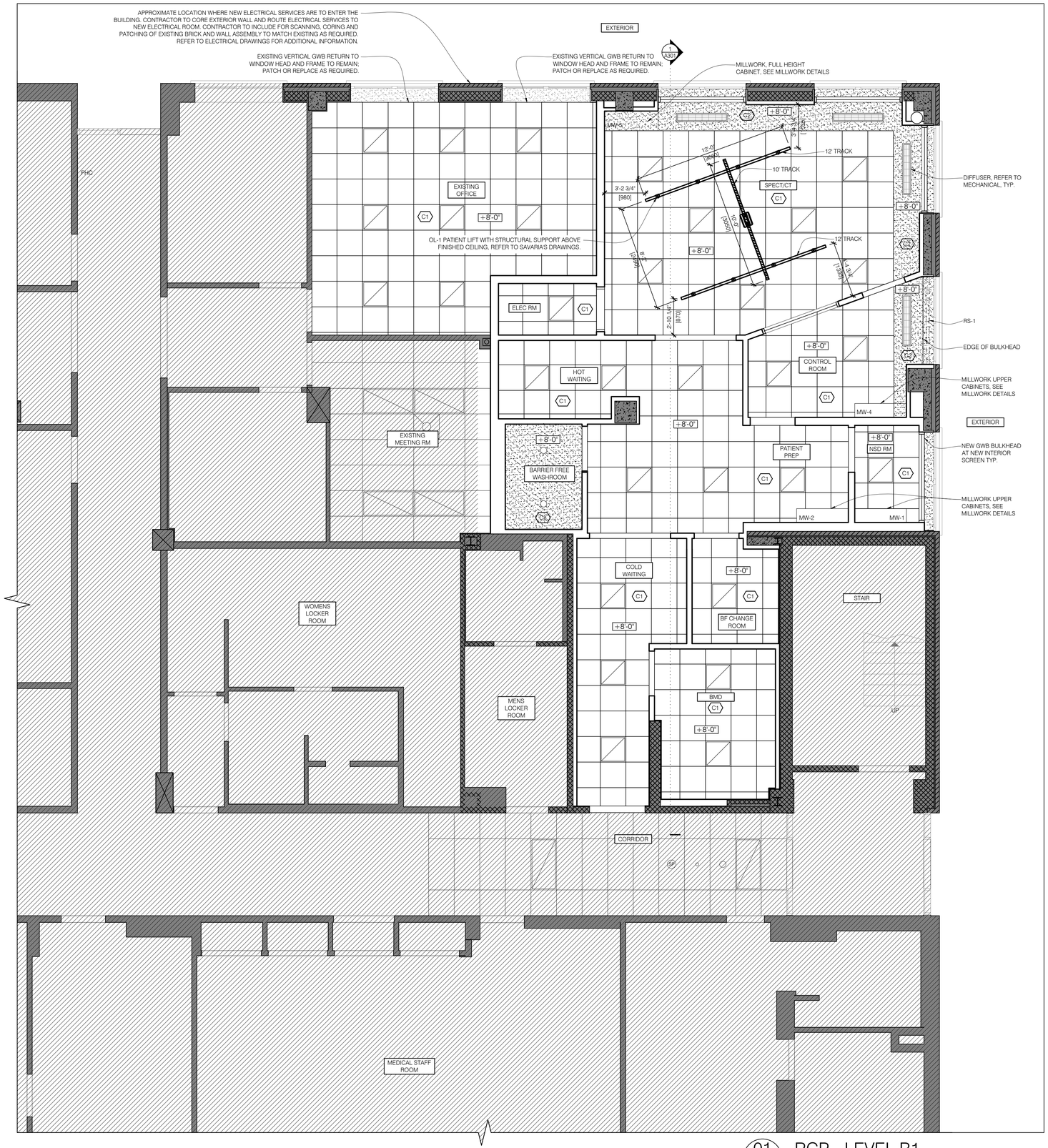

LEGEND

- EXISTING AREA OUT OF PROJECT SCOPE
- EXISTING WALLS TO REMAIN
- NEW WALLS

01 A202 RCP - LEVEL B1
1/4" = 1'-0"

NO.	DATE	ISSUED
06	2026/01/06	ISSUED FOR TENDER
05	2025/12/11	ISSUED FOR 90% CD
04	2025/12/09	ISSUED FOR PERMIT
03	2025/10/15	ISSUED FOR 50% CD
02	2025/10/10	ISSUED FOR CLIENT REVIEW
01	2025/06/06	ISSUED FOR 100% DD

NOTES

CONTRACTOR MUST CHECK AND VERIFY ALL DIMENSIONS SHOWN ON DRAWINGS WITH SITE CONDITIONS, PRIOR TO THE WORK AND NOTIFY THE ARCHITECT OF DIFFERENCES. AWAIT CLARIFICATION BEFORE CONTINUING.

DO NOT SCALE DRAWINGS.

ALL DRAWINGS, SPECIFICATIONS AND RELATED DOCUMENTS ARE THE COPYRIGHT PROPERTY OF THE ARCHITECT AND MUST BE RETURNED UPON REQUEST. REPRODUCTION OF DRAWINGS, SPECIFICATIONS AND RELATED DOCUMENTS IN PART OR IN WHOLE IS FORBIDDEN WITHOUT THE ARCHITECT'S WRITTEN PERMISSION.

THESE DRAWINGS ARE FOR PERMIT PURPOSES ONLY. THEY INDICATE DESIGN INTENT ONLY AND DO NOT FULLY DESCRIBE OR SPECIFY ALL CONDITIONS, MATERIAL OR ASSEMBLIES. REQUEST FURTHER INFORMATION FROM ARCHITECT PRIOR TO COMMENCING CONSTRUCTION AS REQUIRED.

ARCHITECT:
CARTER AI
DAVID CARTER ARCHITECTS INC.
688 Richmond Street West, Suite 303,
Toronto Ontario Canada M6J 1C5 | 416 977 6300

MECHANICAL AND ELECTRICAL ENGINEERING:
QUASAR
250 Rowntree Dairy Road Woodbridge, ON L4L 9J7

STRUCTURAL ENGINEERING:
HONEYCOMB
A MEMBER OF BPA
133 Richmond St W, Suite 302, Toronto, ON M5H 2L3

CLIENT:
COLLINGWOOD G&M HOSPITAL

NUCLEAR MEDICINE SPECT/CT SUITE

COLLINGWOOD GENERAL AND MARINE HOSPITAL

459 HUME STREET, COLLINGWOOD ON

PROJECT NORTH

PROPOSED RCP - LEVEL B1

ENTERED: JM
CHECKED: DC
DATE: 2025/04/23
PROJECT NO. 24-200

DRAWING NO. A202

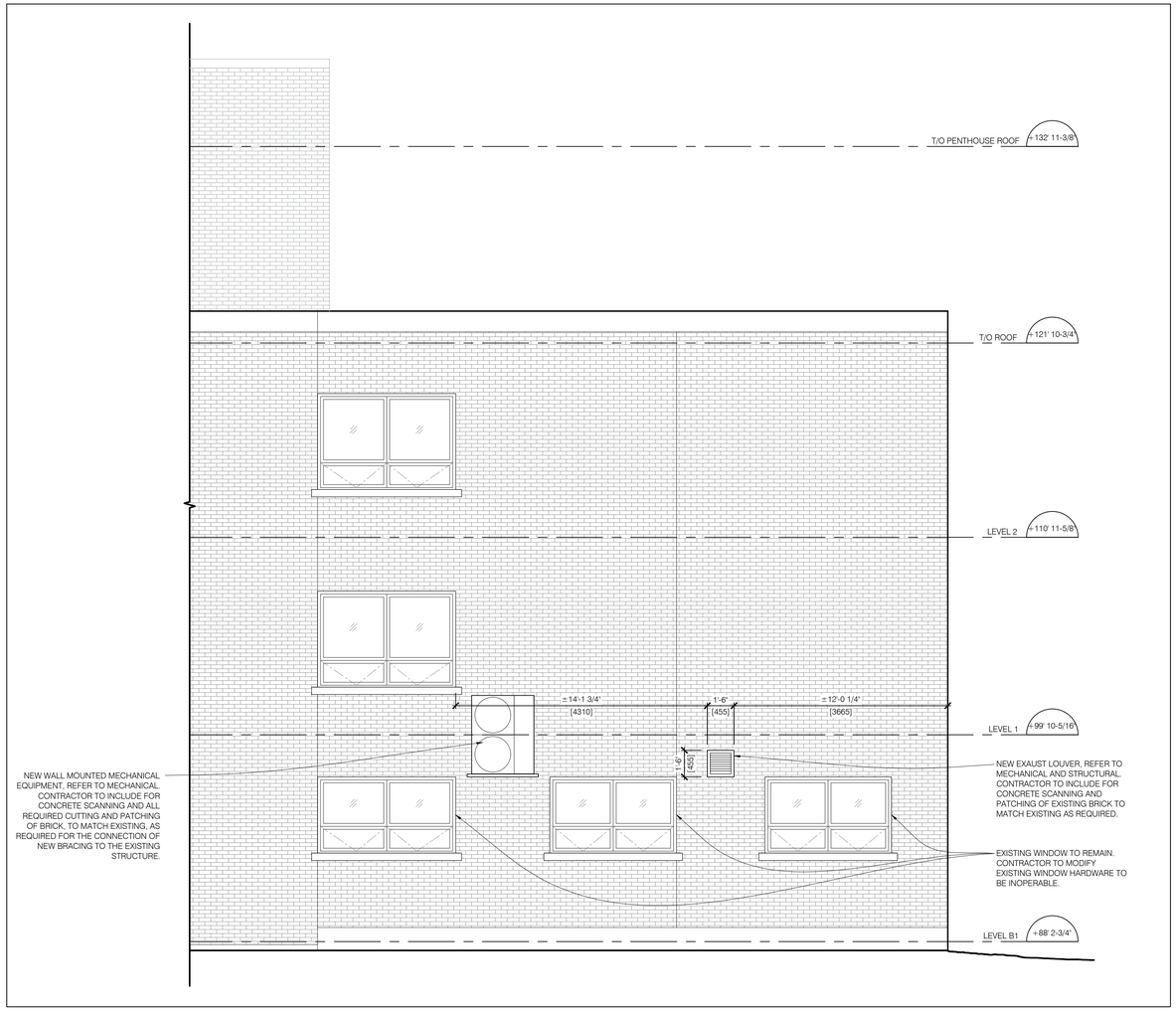

02 A301 EAST ELEVATION
1/4" = 1'-0"

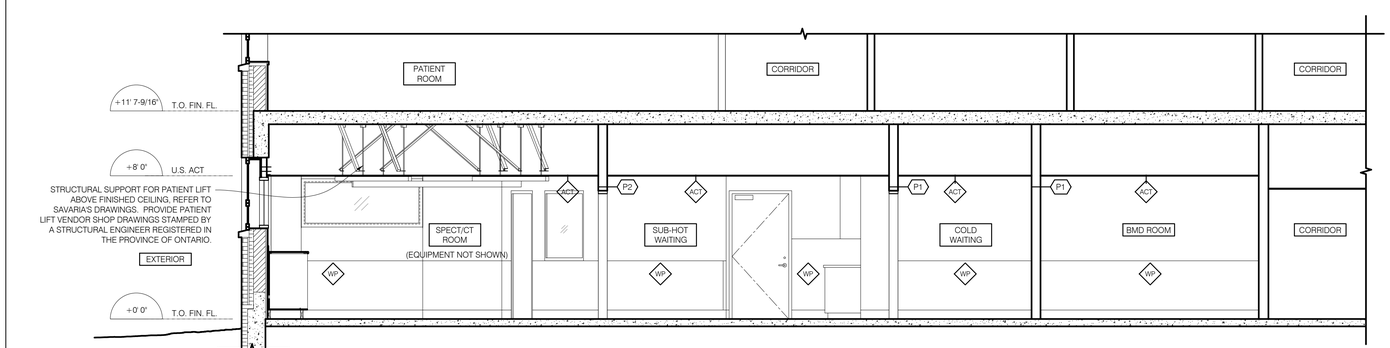

01 A301 SECTION
1/4" = 1'-0"

NO.	DATE	ISSUED
06	2026/01/06	ISSUED FOR TENDER
05	2025/12/11	ISSUED FOR 90% CD
04	2025/12/09	ISSUED FOR PERMIT
03	2025/10/15	ISSUED FOR 50% CD
02	2025/10/10	ISSUED FOR CLIENT REVIEW
01	2025/06/06	ISSUED FOR 100% DD

NOTES

CONTRACTOR MUST CHECK AND VERIFY ALL DIMENSIONS SHOWN ON DRAWINGS WITH SITE CONDITIONS, PRIOR TO THE WORK AND NOTIFY THE ARCHITECT OF DIFFERENCES. AWAIT CLARIFICATION BEFORE CONTINUING.

DO NOT SCALE DRAWINGS.

ALL DRAWINGS, SPECIFICATIONS AND RELATED DOCUMENTS ARE THE COPYRIGHT PROPERTY OF THE ARCHITECT AND MUST BE RETURNED UPON REQUEST. REPRODUCTION OF DRAWINGS, SPECIFICATIONS AND RELATED DOCUMENTS IN PART OR IN WHOLE IS FORBIDDEN WITHOUT THE ARCHITECT'S WRITTEN PERMISSION.

THESE DRAWINGS ARE FOR PERMIT PURPOSES ONLY. THEY INDICATE DESIGN INTENT ONLY AND DO NOT FULLY DESCRIBE OR SPECIFY ALL CONDITIONS, MATERIAL OR ASSEMBLIES. REQUEST FURTHER INFORMATION FROM ARCHITECT PRIOR TO COMMENCING CONSTRUCTION AS REQUIRED.

ARCHITECT:
CARTER AI
DAVID CARTER ARCHITECTS INC.
688 Richmond Street West, Suite 303,
Toronto Ontario Canada M6J 1C5 | 416 977 6300

MECHANICAL AND ELECTRICAL ENGINEERING:
QUASAR
250 Rowntree Dairy Road Woodbridge, ON L4L 9J7

STRUCTURAL ENGINEERING:
HONEYCOMB
A MEMBER OF BPA
133 Richmond St W, Suite 302, Toronto, ON M5H 2L3

CLIENT:
COLLINGWOOD G&M HOSPITAL

NUCLEAR MEDICINE SPECT/CT SUITE

COLLINGWOOD GENERAL AND MARINE HOSPITAL

459 HUME STREET, COLLINGWOOD ON

PROJECT NORTH

PROPOSED SECTION AND ELEVATION

ENTERED: JM
CHECKED: DC
DATE: 2025/04/23
PROJECT NO. 24-200

DRAWING NO. A301

MILLWORK NOTES

1. CONTRACTOR TO SITE VERIFY ALL DIMENSIONS. REPORT ANY DISCREPANCIES TO CONSULTANT FOR CLARIFICATION.

2. MILLWORK PLAN DIMENSIONS INDICATED ARE FROM EDGE OF COUNTERTOP TO EDGE OF COUNTERTOP UNLESS NOTED OTHERWISE. COORDINATE WITH SECTIONS AND ELEVATIONS FOR FURTHER DIMENSIONS.

3. EQUIPMENT WIDTH DIMENSIONS INDICATED ON PLAN REFER TO MINIMUM CLEARANCE REQUIREMENTS. CONTRACTOR TO CONFIRM EXACT EQUIPMENT SIZES AND REQUIRED CUT-OUT DIMENSIONS FOR INCLUSION IN PROPOSED MILLWORK SHOP DRAWINGS. MAINTAIN CLEARANCE INDICATED.

4. REFER TO AND COORDINATE WITH MILLWORK FIXTURES & FITTING SCHEDULE, FINISH SCHEDULE.

5. CONTRACTOR TO COORDINATE AND RECEIVE OWNER SUPPLIED EQUIPMENT AND STORE WITHIN THE SITE WHERE DIRECTED BY OWNER.

6. REFER TO AND COORDINATE WITH MECHANICAL AND ELECTRICAL REQUIREMENTS, AS WELL AS PRODUCT MANUFACTURER'S REQUIREMENTS AND INSTALLATION INSTRUCTIONS.

7. LEDGER PLATES INDICATED SHALL BE FASTENED DIRECTLY TO WALL STUDS.

8. PROVIDE CONTINUOUS SILICONE SEALANT BETWEEN NEW SOLID SURFACE COUNTERTOPS AND WALLS.

9. NO EXPOSED WOOD SURFACES ARE PERMITTED. REFER TO DETAILS.

10. COUNTERTOP EDGE TO BE BULLNOSE TYPE, 1/4" RADIUS EDGES, TYP.

11. PROVIDE WHITE MELAMINE P-LAM AT CABINET INTERIORS, TYPICAL.

12. EXACT CABLE GROMMET LOCATIONS AND QUANTITIES TO BE DETERMINED ON SITE WITH OWNER. HOLES TO BE FIELD CUT.

13. REFER TO SPECIFICATIONS. PROVIDE ALL REQUIRED SUBMITTALS FOR REVIEW.

14. PROVIDE A CONTINUOUS BEAD OF SILICON SEALANT BETWEEN THE BASE KICK AND THE FLOOR, AND BETWEEN CASEWORK/MILLWORK AND ADJACENT WALLS ON ALL SIDES, TYPICAL.

15. REFER TO SPECIFICATION 12 35 53_13 METAL LABRATORY CASEWORK FOR MW-1 HARDWARE.

MILLWORK HARDWARE SCHEDULE:

PULLS:	RICHELIEU 'D' PULL, 4" LENGTH. SS FINISH.
HINGES:	HETTICH 170 DEG. FULL OVERLAY CONCEALED HINGE, INTERMAT 9956.
DRAWER SLIDES:	HETTICH KA-5632 FULL EXTENSION, BALL BEARING.
GROMMET:	RICHELIEU, ROUND CABLE GROMMET 60091090. COLOUR: BLACK.
PILASTER:	RICHELIEU KOLOSSUS PILASTER, INSTALLED FLUSH WITH CABINET SURFACE. SS FINISH. C/W KOLOSSUS PILASTER CLIPS.
ELBOW CATCH:	HAFELE DELUXE MODEL, BRASS. SPRING LOADED. CHROME FINISH.

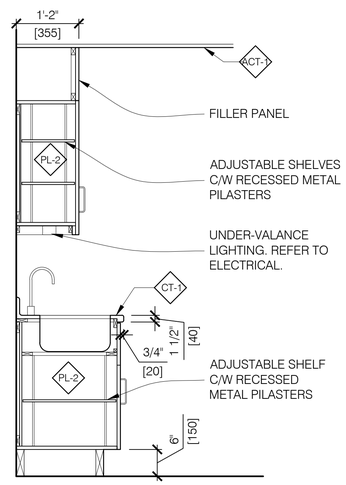

06 A501 MW-2 SECTION
3/4" = 1'-0"

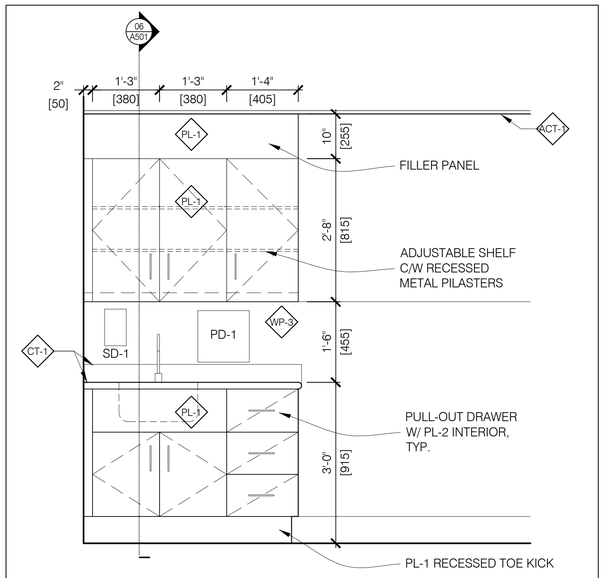

05 A501 MW-2 ELEVATION
3/4" = 1'-0"

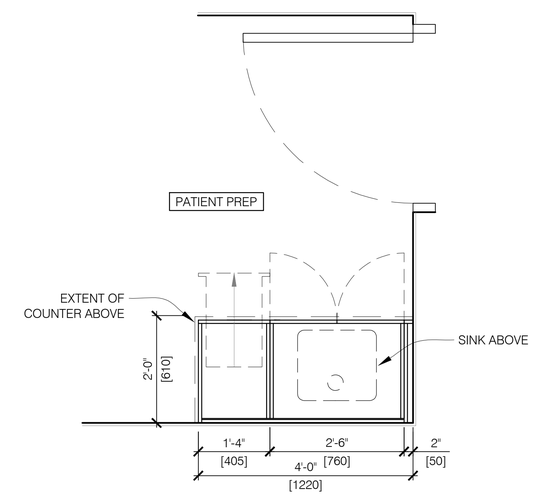

04 A501 MW-2 BASE CABINET PLAN
3/4" = 1'-0"

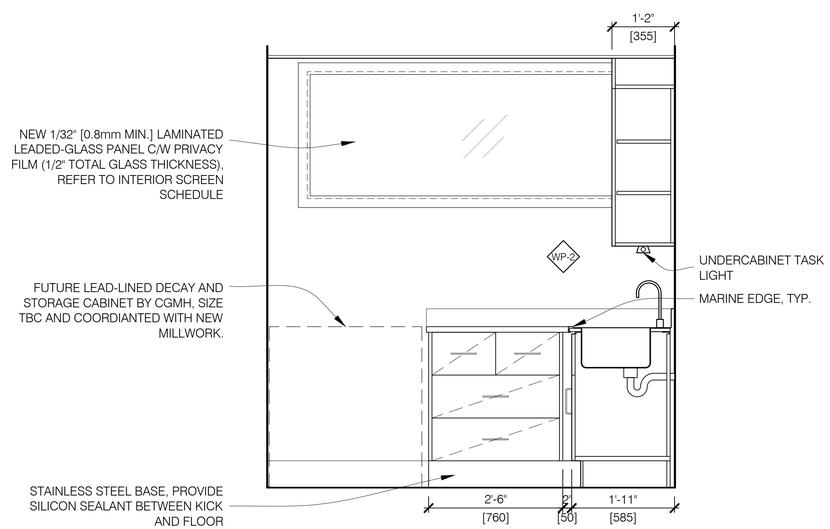

03 A501 MW-1 ELEVATION/SECTION
3/4" = 1'-0"

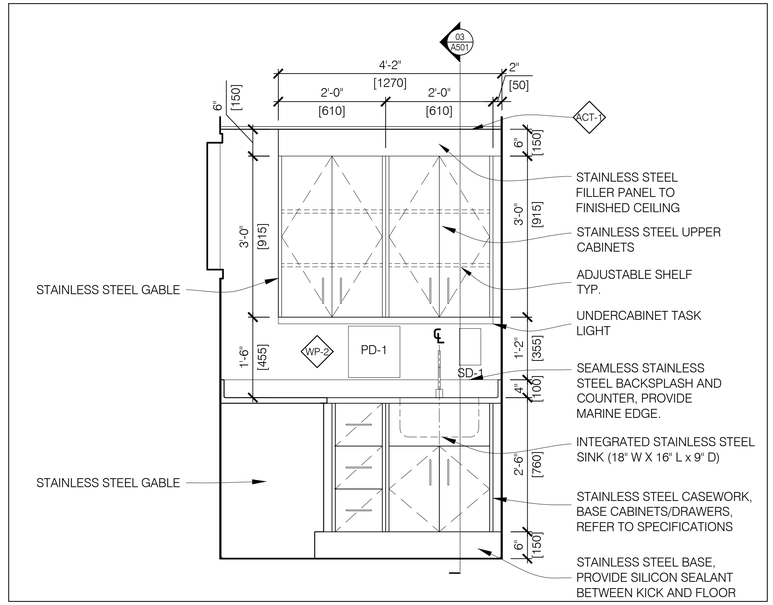

02 A501 MW-1 ELEVATION
3/4" = 1'-0"

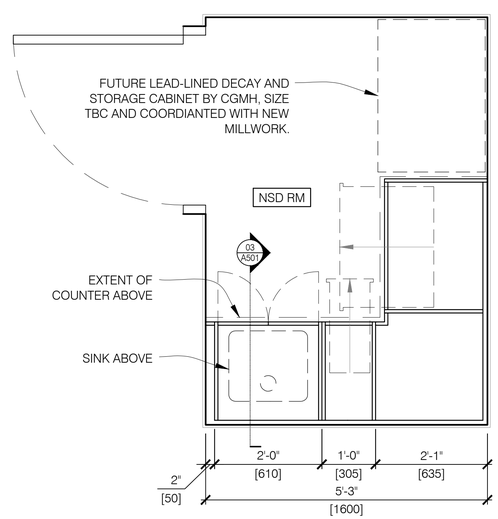

01 A501 MW-1 BASE CABINET PLAN
3/4" = 1'-0"

NO.	DATE	ISSUED
06	2026/01/06	ISSUED FOR TENDER
05	2025/12/11	ISSUED FOR 90% CD
04	2025/12/09	ISSUED FOR PERMIT
03	2025/10/15	ISSUED FOR 50% CD
02	2025/10/10	ISSUED FOR CLIENT REVIEW
01	2025/06/06	ISSUED FOR 100% DD

NOTES

CONTRACTOR MUST CHECK AND VERIFY ALL DIMENSIONS SHOWN ON DRAWINGS WITH SITE CONDITIONS, PRIOR TO THE WORK AND NOTIFY THE ARCHITECT OF DIFFERENCES. AWAIT CLARIFICATION BEFORE CONTINUING.

DO NOT SCALE DRAWINGS.

ALL DRAWINGS, SPECIFICATIONS AND RELATED DOCUMENTS ARE THE COPYRIGHT PROPERTY OF THE ARCHITECT AND MUST BE RETURNED UPON REQUEST. REPRODUCTION OF DRAWINGS, SPECIFICATIONS AND RELATED DOCUMENTS IN PART OR IN WHOLE IS FORBIDDEN WITHOUT THE ARCHITECT'S WRITTEN PERMISSION.

THESE DRAWINGS ARE FOR PERMIT PURPOSES ONLY. THEY INDICATE DESIGN INTENT ONLY AND DO NOT FULLY DESCRIBE OR SPECIFY ALL CONDITIONS, MATERIAL OR ASSEMBLIES. REQUEST FURTHER INFORMATION FROM ARCHITECT PRIOR TO COMMENCING CONSTRUCTION AS REQUIRED.

ARCHITECT:
CARTER AI
DAVID CARTER ARCHITECTS INC.
688 Richmond Street West, Suite 303,
Toronto Ontario Canada M6J 1C5 | 416 977 6300

MECHANICAL AND ELECTRICAL ENGINEERING:
QUASAR
250 Rowntree Dairy Road Woodbridge, ON L4L 9J7

STRUCTURAL ENGINEERING:
HONEYCOMB
A MEMBER OF BPA
133 Richmond St W, Suite 302, Toronto, ON M5H 2L3

CLIENT:
COLLINGWOOD G&M HOSPITAL

NUCLEAR MEDICINE SPECT/CT SUITE
COLLINGWOOD GENERAL AND MARINE HOSPITAL
459 HUME STREET, COLLINGWOOD ON

PROJECT NORTH

PROPOSED MILLWORK DETAILS

ENTERED: JM
CHECKED: DC
DATE: 2025/04/23
PROJECT NO. 24-200

DRAWING NO. A501

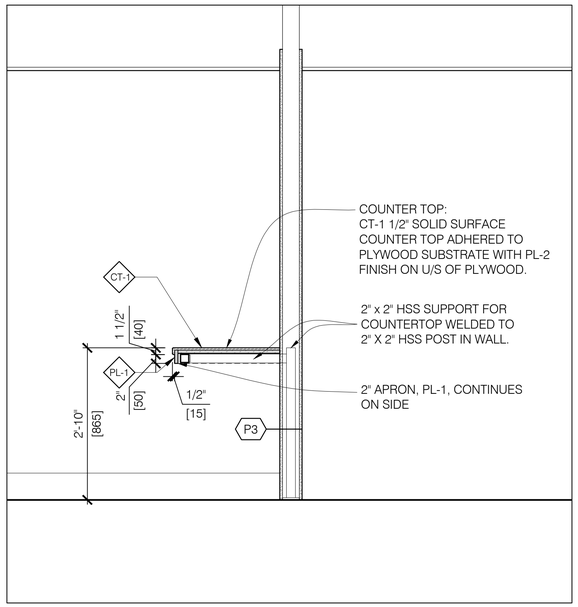

07 A502 MW-3 CONTROL DESK SECTION
3/4" = 1'-0"

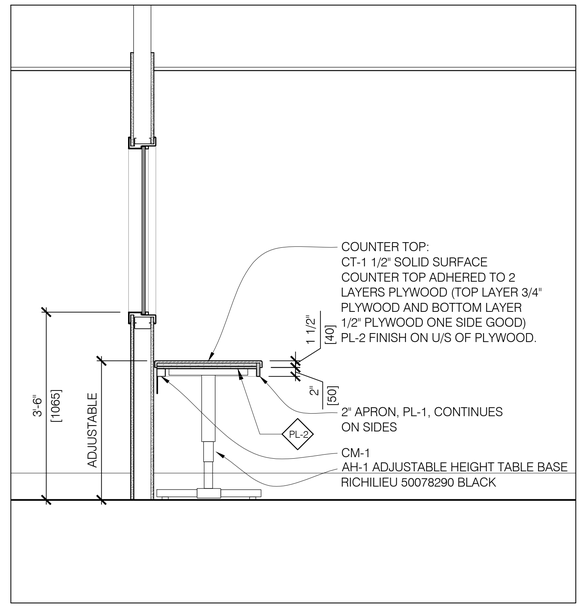

06 A502 MW-3 CONTROL DESK SECTION
3/4" = 1'-0"

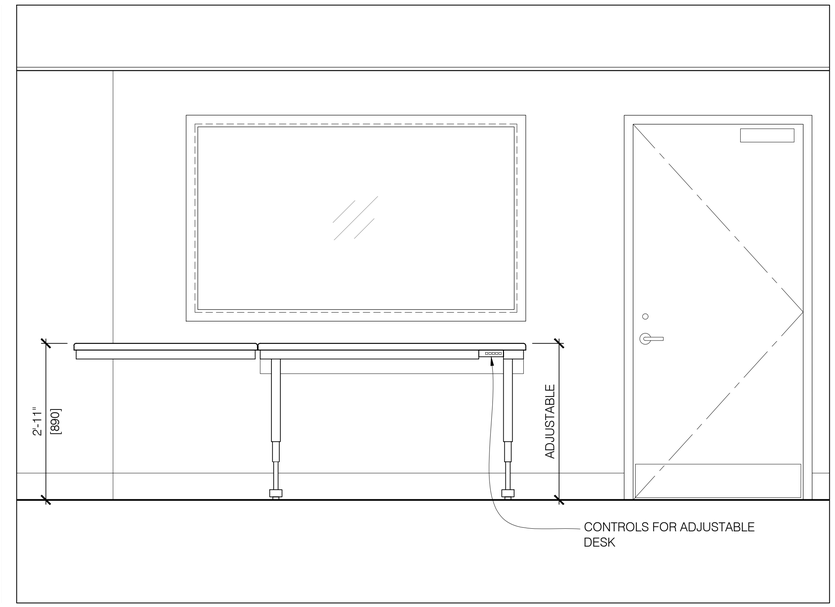

05 A502 MW-3 CONTROL DESK ELEVATION
3/4" = 1'-0"

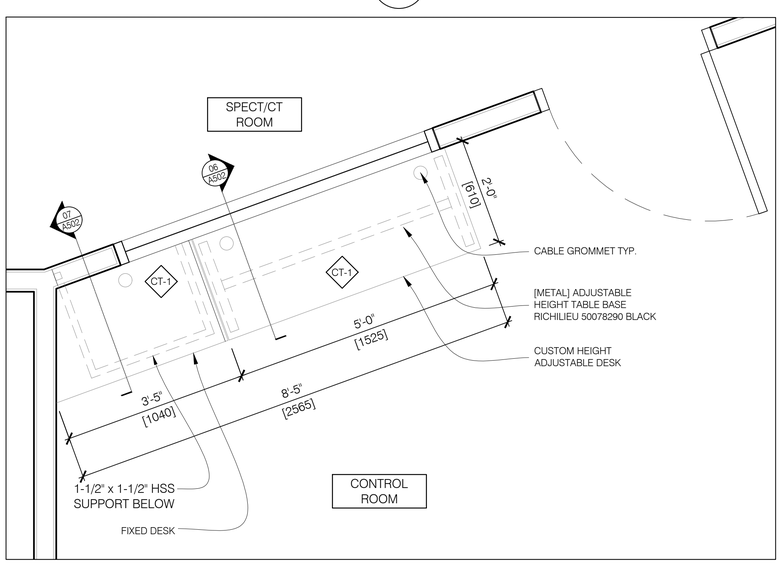

04 A502 MW-3 CONTROL DESK PLAN
3/4" = 1'-0"

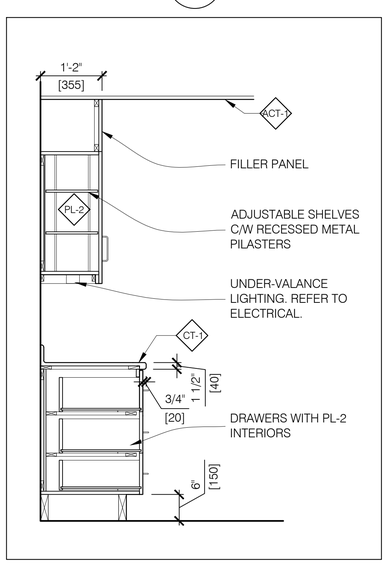

03 A502 MW-4 SECTION
3/4" = 1'-0"

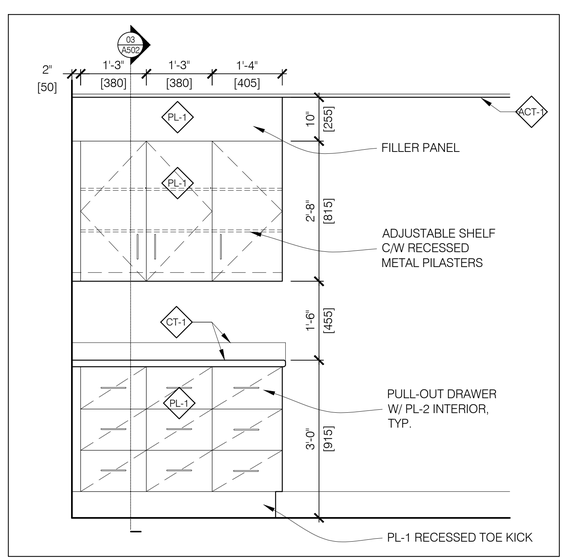

02 A502 MW-4 ELEVATION
3/4" = 1'-0"

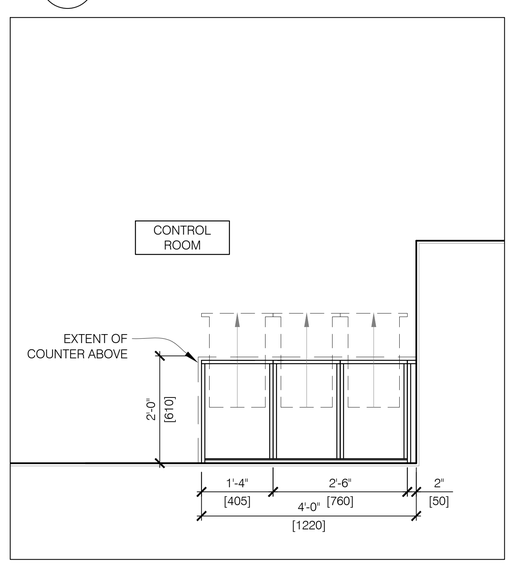

01 A502 MW-4 BASE CABINET PLAN
3/4" = 1'-0"

NO.	DATE	ISSUED
06	2026/01/06	ISSUED FOR TENDER
05	2025/12/11	ISSUED FOR 90% CD
04	2025/12/09	ISSUED FOR PERMIT
03	2025/10/15	ISSUED FOR 50% CD
02	2025/10/10	ISSUED FOR CLIENT REVIEW
01	2025/06/06	ISSUED FOR 100% DD

NOTES

CONTRACTOR MUST CHECK AND VERIFY ALL DIMENSIONS SHOWN ON DRAWINGS WITH SITE CONDITIONS, PRIOR TO THE WORK AND NOTIFY THE ARCHITECT OF DIFFERENCES. AWAIT CLARIFICATION BEFORE CONTINUING.

DO NOT SCALE DRAWINGS.

ALL DRAWINGS, SPECIFICATIONS AND RELATED DOCUMENTS ARE THE COPYRIGHT PROPERTY OF THE ARCHITECT AND MUST BE RETURNED UPON REQUEST. REPRODUCTION OF DRAWINGS, SPECIFICATIONS AND RELATED DOCUMENTS IN PART OR IN WHOLE IS FORBIDDEN WITHOUT THE ARCHITECT'S WRITTEN PERMISSION.

THESE DRAWINGS ARE FOR PERMIT PURPOSES ONLY. THEY INDICATE DESIGN INTENT ONLY AND DO NOT FULLY DESCRIBE OR SPECIFY ALL CONDITIONS, MATERIAL OR ASSEMBLIES. REQUEST FURTHER INFORMATION FROM ARCHITECT PRIOR TO COMMENCING CONSTRUCTION AS REQUIRED.

ARCHITECT:
CARTER AI
DAVID CARTER ARCHITECTS INC.
688 Richmond Street West, Suite 303,
Toronto Ontario Canada M6J 1C5 | 416 977 6300

MECHANICAL AND ELECTRICAL ENGINEERING:
QUASAR
250 Rowntree Dairy Road Woodbridge, ON L4L 9J7

STRUCTURAL ENGINEERING:
HONEYCOMB
A MEMBER OF BPA
133 Richmond St W, Suite 302, Toronto, ON M5H 2L3

CLIENT:
COLLINGWOOD G&M HOSPITAL

NUCLEAR MEDICINE
SPECT/CT SUITE
COLLINGWOOD GENERAL AND MARINE HOSPITAL
459 HUME STREET, COLLINGWOOD ON

PROJECT NORTH

PROPOSED MILLWORK DETAILS

ENTERED: JM
CHECKED: AM
DATE: 2025/04/23
PROJECT NO. 24-200

DRAWING NO. A502

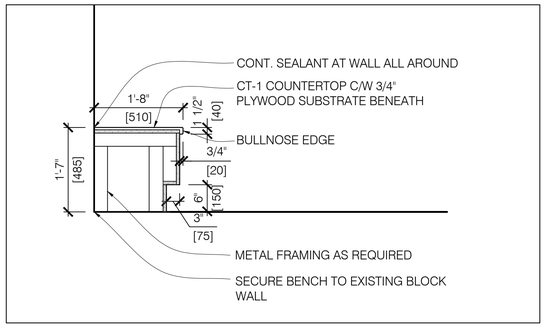

07 A503 MW-6 SECTION
3/4" = 1'-0"

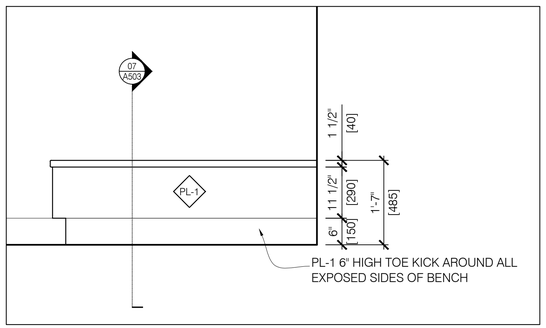

06 A503 MW-6 ELEVATION
3/4" = 1'-0"

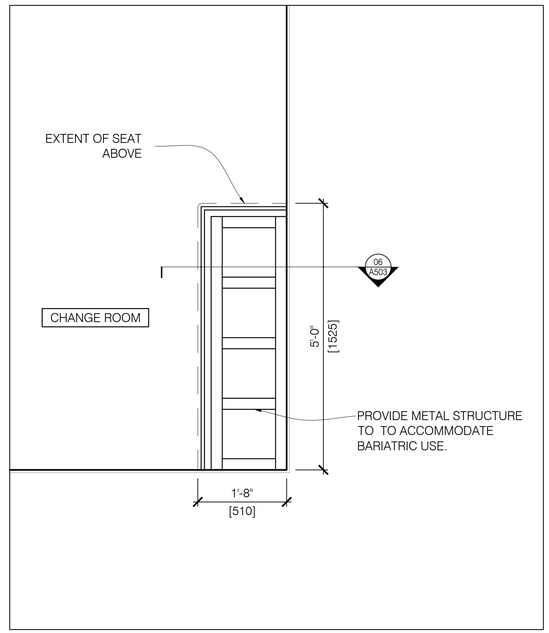

05 A503 MW-6 PLAN
3/4" = 1'-0"

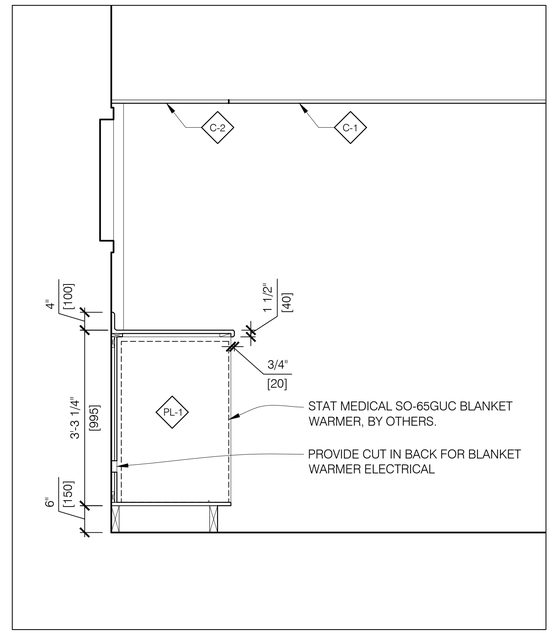

04 A503 MW-5 SECTION
3/4" = 1'-0"

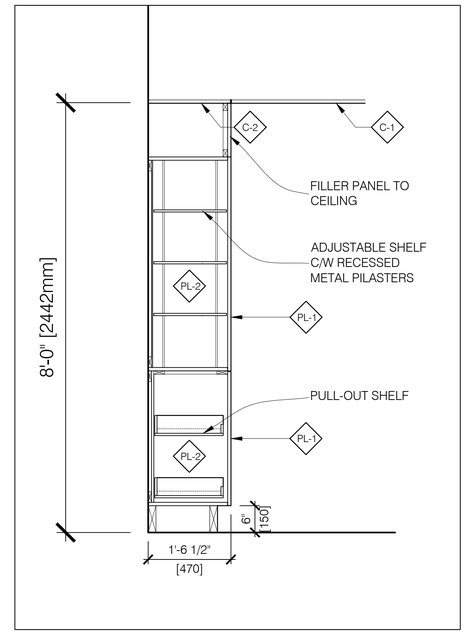

03 A503 MW-5 SECTION
3/4" = 1'-0"

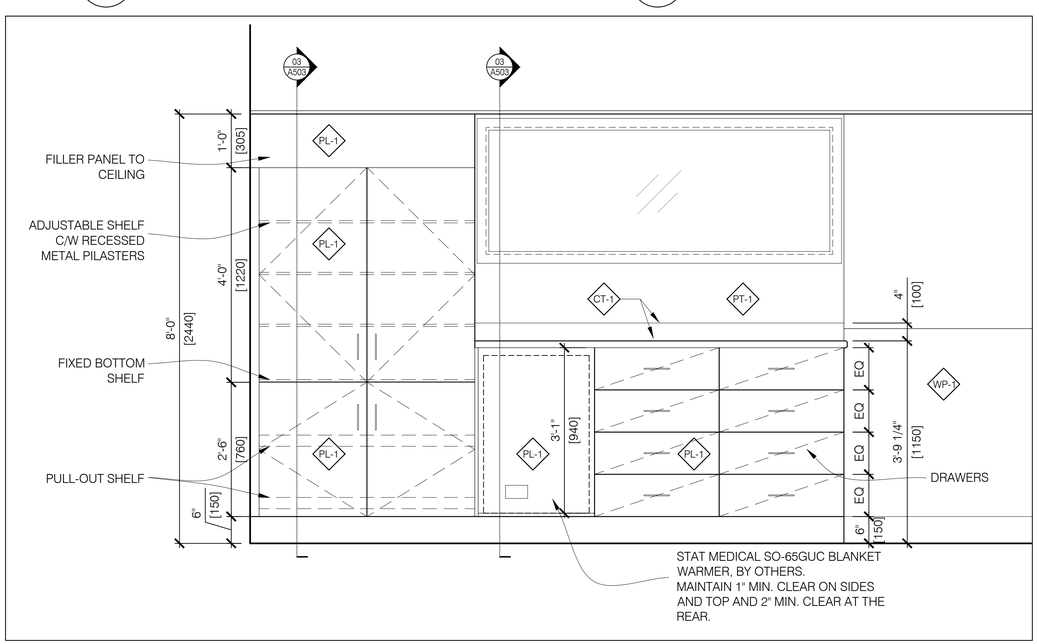

02 A503 MW-5 ELEVATION
3/4" = 1'-0"

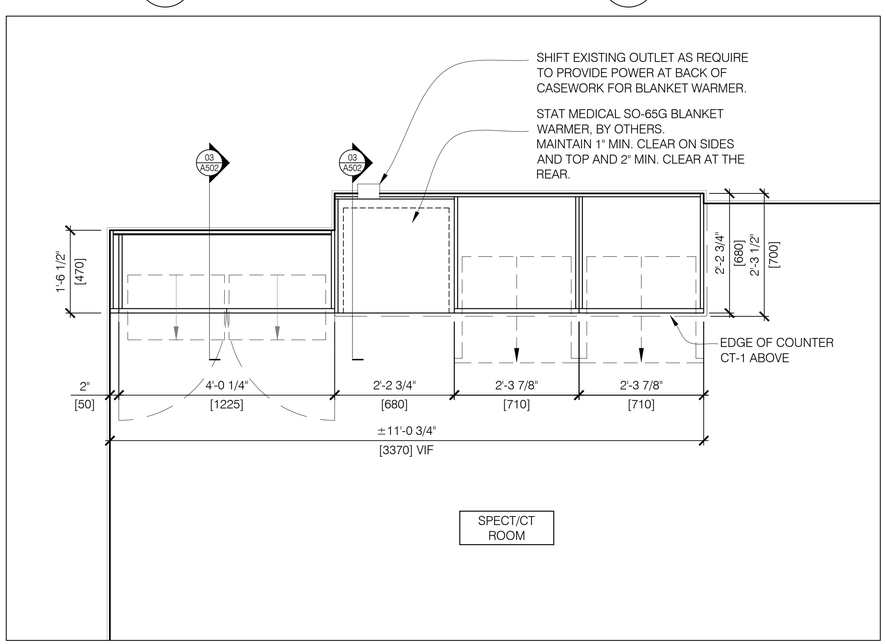

01 A503 MW-5 BASE CABINET PLAN
3/4" = 1'-0"

NO.	DATE	ISSUED
06	2026/01/06	ISSUED FOR TENDER
05	2025/12/11	ISSUED FOR 90% CD
04	2025/12/09	ISSUED FOR PERMIT
03	2025/10/15	ISSUED FOR 50% CD
02	2025/10/10	ISSUED FOR CLIENT REVIEW
01	2025/06/06	ISSUED FOR 100% DD

NOTES

CONTRACTOR MUST CHECK AND VERIFY ALL DIMENSIONS SHOWN ON DRAWINGS WITH SITE CONDITIONS, PRIOR TO THE WORK AND NOTIFY THE ARCHITECT OF DIFFERENCES. AWAIT CLARIFICATION BEFORE CONTINUING.

DO NOT SCALE DRAWINGS.

ALL DRAWINGS, SPECIFICATIONS AND RELATED DOCUMENTS ARE THE COPYRIGHT PROPERTY OF THE ARCHITECT AND MUST BE RETURNED UPON REQUEST. REPRODUCTION OF DRAWINGS, SPECIFICATIONS AND RELATED DOCUMENTS IN PART OR IN WHOLE IS FORBIDDEN WITHOUT THE ARCHITECT'S WRITTEN PERMISSION.

THESE DRAWINGS ARE FOR PERMIT PURPOSES ONLY. THEY INDICATE DESIGN INTENT ONLY AND DO NOT FULLY DESCRIBE OR SPECIFY ALL CONDITIONS, MATERIAL OR ASSEMBLIES. REQUEST FURTHER INFORMATION FROM ARCHITECT PRIOR TO COMMENCING CONSTRUCTION AS REQUIRED.

ARCHITECT:
CARTER AI
DAVID CARTER ARCHITECTS INC.
688 Richmond Street West, Suite 303,
Toronto Ontario Canada M6J 1C5 | 416 977 6300

MECHANICAL AND ELECTRICAL ENGINEERING:
QUASAR
250 Rowntree Dairy Road Woodbridge, ON L4L 9J7

STRUCTURAL ENGINEERING:
HONEYCOMB
A MEMBER OF BPA
133 Richmond St W, Suite 302, Toronto, ON M5H 2L3

CLIENT:
COLLINGWOOD G&M HOSPITAL

NUCLEAR MEDICINE SPECT/CT SUITE
COLLINGWOOD GENERAL AND MARINE HOSPITAL
459 HUME STREET, COLLINGWOOD ON

PROJECT NORTH

PROPOSED MILLWORK DETAILS

ENTERED: JM
CHECKED: AM
DATE: 2025/04/23
PROJECT NO. 24-200

DRAWING NO. A503

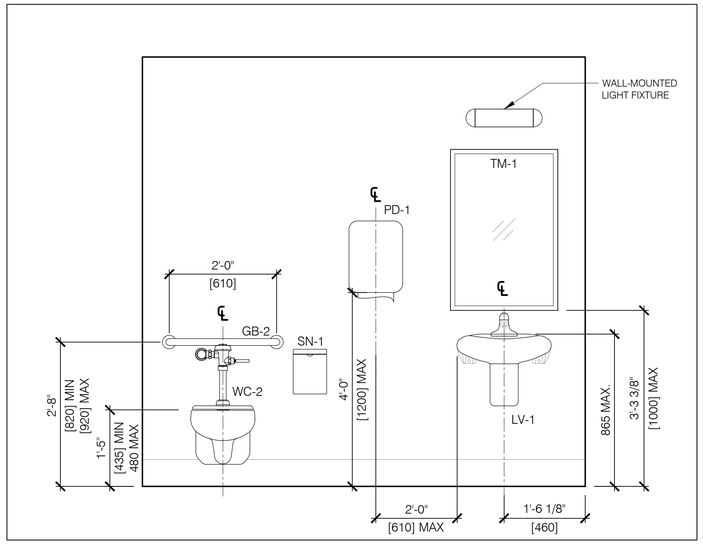

05 A601 W/C WEST ELEVATION
3/4" = 1'-0"

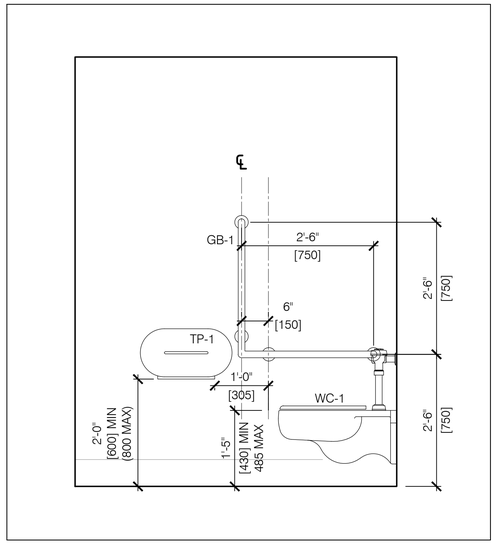

04 A601 W/C SOUTH ELEVATION
3/4" = 1'-0"

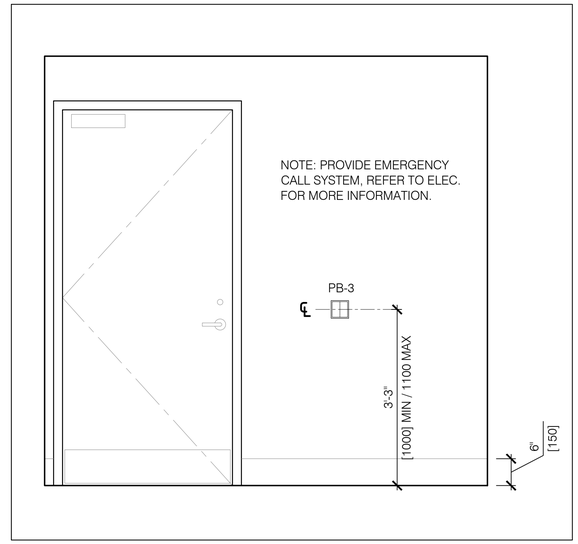

03 A601 W/C EAST ELEVATION
3/4" = 1'-0"

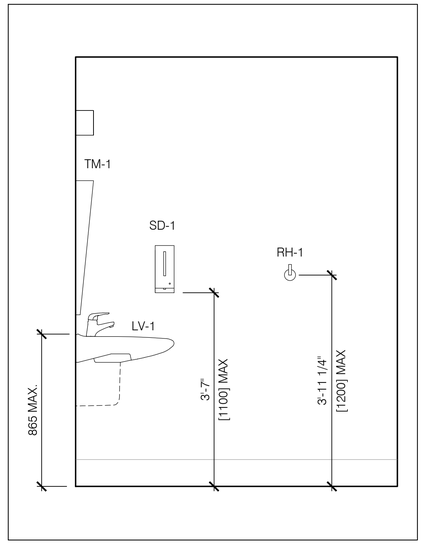

02 A601 W/C NORTH ELEVATION
3/4" = 1'-0"

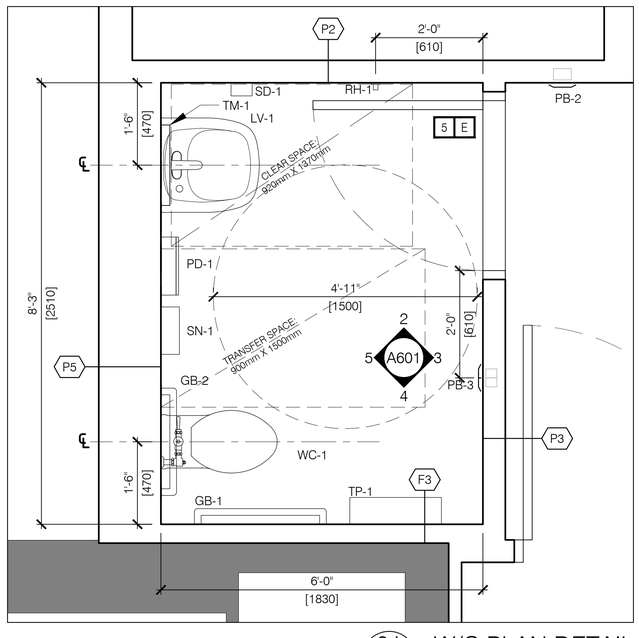

01 A601 W/C PLAN DETAIL
3/4" = 1'-0"

NO.	DATE	ISSUED
06	2026/01/06	ISSUED FOR TENDER
05	2025/12/11	ISSUED FOR 90% CD
04	2025/12/09	ISSUED FOR PERMIT
03	2025/10/15	ISSUED FOR 50% CD
02	2025/10/10	ISSUED FOR CLIENT REVIEW
01	2025/06/06	ISSUED FOR 100% DD

NOTES

CONTRACTOR MUST CHECK AND VERIFY ALL DIMENSIONS SHOWN ON DRAWINGS WITH SITE CONDITIONS, PRIOR TO THE WORK AND NOTIFY THE ARCHITECT OF DIFFERENCES. AWAIT CLARIFICATION BEFORE CONTINUING.

DO NOT SCALE DRAWINGS.

ALL DRAWINGS, SPECIFICATIONS AND RELATED DOCUMENTS ARE THE COPYRIGHT PROPERTY OF THE ARCHITECT AND MUST BE RETURNED UPON REQUEST. REPRODUCTION OF DRAWINGS, SPECIFICATIONS AND RELATED DOCUMENTS IN PART OR IN WHOLE IS FORBIDDEN WITHOUT THE ARCHITECT'S WRITTEN PERMISSION.

THESE DRAWINGS ARE FOR PERMIT PURPOSES ONLY. THEY INDICATE DESIGN INTENT ONLY AND DO NOT FULLY DESCRIBE OR SPECIFY ALL CONDITIONS, MATERIAL OR ASSEMBLIES. REQUEST FURTHER INFORMATION FROM ARCHITECT PRIOR TO COMMENCING CONSTRUCTION AS REQUIRED.

ARCHITECT:
CARTER AI
DAVID CARTER ARCHITECTS INC.
688 Richmond Street West, Suite 303,
Toronto Ontario Canada M6J 1C5 | 416 977 6300

MECHANICAL AND ELECTRICAL ENGINEERING:
QUASAR
250 Rowntree Dairy Road Woodbridge, ON L4L 9J7

STRUCTURAL ENGINEERING:
HONEYCOMB
A MEMBER OF BPA
133 Richmond St W, Suite 302, Toronto, ON M5H 2L3

CLIENT:
COLLINGWOOD G&M HOSPITAL

NUCLEAR MEDICINE
SPECT/CT SUITE
COLLINGWOOD GENERAL AND MARINE HOSPITAL
459 HUME STREET, COLLINGWOOD ON

PROJECT NORTH

PROPOSED WASHROOM DETAILS

ENTERED: JM
CHECKED: DC
DATE: 2025/04/23
PROJECT NO. 24-200

DRAWING NO. A601

A. GENERAL

1. DRAWINGS ARE NOT TO BE SCALED. CONTRACTOR WILL VERIFY ALL EXISTING CONDITIONS AND DIMENSIONS REQUIRED TO PERFORM THE WORK AND WILL REPORT ANY DISCREPANCIES WITH THE CONTRACT DOCUMENTS TO THE STRUCTURAL ENGINEER BEFORE COMMENCING WORK.
2. THESE DOCUMENTS ARE NOT TO BE USED FOR CONSTRUCTION UNLESS SPECIFICALLY NOTED FOR SUCH PURPOSE.
3. WHERE DOCUMENTS ARE REFERENCED IN THE GENERAL AND DESIGN NOTES, THEY SHALL BE THE LATEST EDITIONS OR REVISION, UNLESS NOTED OTHERWISE.
4. READ STRUCTURAL DOCUMENTS IN CONJUNCTION WITH ARCHITECTURAL, MECHANICAL, ELECTRICAL, AND OTHER CONTRACT DOCUMENTS.
5. BEFORE PROCEEDING WITH THE WORK, CHECK ALL DIMENSIONS SHOWN ON THE STRUCTURAL DOCUMENTS WITH SITE CONDITIONS AND THOSE SHOWN ON ARCHITECTURAL, MECHANICAL AND ELECTRICAL DOCUMENTS AND REPORT DISCREPANCIES TO THE CONSULTANT.
6. PROVIDE LABOUR, MATERIALS, PLANT AND EQUIPMENT TO COMPLETE ALL STRUCTURAL WORK INDICATED ON THE CONTRACT DOCUMENTS.
7. CARRY OUT CONSTRUCTION OPERATIONS, INCLUDING THE INSTALLATION OF TEMPORARY GUYING AND SHORING REQUIRED, ENSURING THAT THE EXISTING STRUCTURE OR MEMBERS ALREADY ERECTED ARE NOT LOADED IN EXCESS OF THEIR SAFE LOAD CARRYING CAPACITY.

B. REFERENCE STANDARDS/CODES AND ACTS

1. CONFORM WITH THE ONTARIO BUILDING CODE 2024, AND ANY APPLICABLE ACTS OF ANY AUTHORITY HAVING JURISDICTION, AND THE FOLLOWING:
   - 1.1. CAN/CSA A23.1 — CONCRETE MATERIALS AND METHODS OF CONCRETE CONSTRUCTION.
   - 1.2. CAN/CSA A23.2 — METHODS OF TEST FOR CONCRETE.
   - 1.3. CAN/CSA A23.3 — DESIGN OF CONCRETE STRUCTURES.
   - 1.4. CAN/CSA-S16 — LIMIT STATES DESIGN OF STEEL STRUCTURES.
   - 1.5. RSIC 1996 — REINFORCING STEEL INSTITUTE OF CANADA (RSIC), MANUAL OF STANDARD PRACTICE.
   - 1.6. CAN/CSA G40.20/G40.21 — STRUCTURAL QUALITY STEEL.
2. ALL STANDARDS AND PUBLICATIONS REFERENCED BY THE STANDARDS NOTED ABOVE ARE TO APPLY.
3. WHERE THERE ARE DIFFERENCES BETWEEN THE DOCUMENTS AND THE STANDARDS, CODES AND ACTS, THE MOST STRINGENT SHALL GOVERN.

C. QUALIFICATIONS

1 ANY ORGANIZATION UNDERTAKING TO WELD UNDER THIS CONTRACT SHALL BE CERTIFIED BY THE CANADIAN WELDING BUREAU UNDER REQUIREMENTS OF DIVISION 1 OR DIVISION 2.1 OF W47.1.

D. SUBMITTALS

1. SHOP DRAWINGS
   - 1.1. SUBMIT FOR REVIEW BY THE CONSULTANT, DETAILED SHOP DRAWINGS FOR ALL TEMPORARY AND PERMANENT STRUCTURAL WORK INCLUDING, BUT NOT LIMITED TO: CONCRETE FORMWORK; REINFORCING STEEL; STRUCTURAL STEEL.
   - 1.2. THE SCALE OF THE DRAWINGS SHALL BE SUCH THAT THE DETAILS OF THE STRUCTURAL WORK ARE CLEARLY SHOWN, AND IN NO CASE SMALLER THAN 1:50 (1/4" = 1'0").
   - 1.3. THE STRUCTURAL DRAWINGS SHALL NOT BE REPRODUCED, IN WHOLE OR IN PART, FOR USE AS SHOP DRAWINGS.
   - 1.4. EACH DRAWING SUBMITTED FOR CONCRETE FORMWORK; STRUCTURAL STEEL SHALL BEAR THE SEAL AND SIGNATURE OF A QUALIFIED PROFESSIONAL ENGINEER LICENSED IN THE PROVINCE OF ONTARIO.
   - 1.5. CONTRACTOR SHALL ALLOW FOR A 5 WORKING DAY TURN AROUND TIME FOR STRUCTURAL CONSULTANT TO REVIEW THE SHOP DRAWINGS.
2. CALCULATIONS
   - 2.1. SUBMIT CALCULATIONS, BEARING THE SEAL AND SIGNATURE OF PROFESSIONAL ENGINEER LICENSED IN THE PROVINCE OF ONTARIO, FOR STRUCTURAL WORK, IF REQUESTED BY THE CONSULTANT.
3. MILL TEST REPORTS
   - 3.1. MAKE AVAILABLE TO THE CONSULTANT COPIES OF ALL MILL TEST REPORTS COVERING CHEMICAL AND PHYSICAL PROPERTIES OF MATERIALS USED.
4. CONCRETE MIX DESIGNS
   - 4.1. SUBMIT ALL CONCRETE MIX DESIGNS FOR REVIEW.
   - 4.2. DESCRIBE IN DETAIL ON THE MIX DESIGN SUMMARY THE LOCATION(S) WHERE EACH MIX IS TO BE PLACED IN THE STRUCTURE.
5. AS-BUILT DRAWINGS
   - 5.1. MARK ON A COMPLETE SET OF REPRODUCIBLE AS-BUILT DRAWINGS ANY CHANGES, ADDITIONS, OR DELETIONS THAT OCCUR DURING CONSTRUCTION AS A RESULT OF THE CONTRACTOR'S WORK, CHANGE OF ORDERS OR FOR ANY OTHER REASON.

E. MATERIALS

1. PROVIDE ONLY NEW STRUCTURAL MATERIALS IN ACCORDANCE WITH THE REFERENCE STANDARDS AND THE FOLLOWING, UNLESS OTHERWISE NOTED.
   - 1.1. CONCRETE: CONFORM TO THE REQUIREMENTS OF CSA-A23.1 AND THE FOLLOWING:
     - 1.1.1. EXPOSED TO FREEZE-THAW & CHLORIDES (EXPOSURE CLASS C-1): F'C = 35MPA.
     - 1.1.2. EXPOSED TO FREEZE-THAW (EXPOSURE CLASS F-1): F'C = 30MPA.
     - 1.1.3. NOT EXPOSED: F'C = 25MPA.
   - 1.2. REINFORCEMENT: CONFORM TO CSA G30 SERIES, FY = 400 MPA FOR ALL REINFORCEMENT EXCEPT THAT FY = 386 MPA FOR WELDED WIRE FABRIC. [PROVIDE WELDED WIRE FABRIC IN FLAT SHEETS ONLY]. ALL REINFORCEMENT IS TO BE BLACK EXCEPT WHERE THE SUFFIX C IS USED TO DESIGNATE EPOXY COATED REINFORCEMENT.
   - 1.3. WELDED WIRE FABRIC: CONFORM TO CSA G30 SERIES, GRADE 386, IN FLAT SHEETS.
   - 1.4. STRUCTURAL STEEL:
     - 1.4.1. STRUCTURAL WIDE FLANGE AND WELDED WIDE FLANGE SHAPES (W, WWF) TO CONFORM TO CAN/CSA-G40.20/G40.21 GRADE 350W.
     - 1.4.2. ANGLES AND CHANNELS (L, C) TO CONFORM TO CAN/CSA-G40.20/G40.21 GRADE 300W.
     - 1.4.3. HOLLOW STRUCTURAL SECTIONS (HSS) TO CONFORM TO ASTM A500 GRADE C.
   - 1.5. SHOP PAINT/PRIMER:
     - 1.5.1. ENSURE THAT THE SHOP PRIMER OR PAINT IS COMPATIBLE WITH SPRAY FIREPROOFING AND/OR THE TOP COAT PAINT SYSTEM SPECIFIED, WHERE APPLICABLE.
     - 1.5.2. SHOP PAINT: TO CISC/CPMA 1-73A OR SSPC PAINT 15.
     - 1.5.3. SHOP PRIMER: TO CISC/CPMA STANDARD 2-75.
   - 1.6. STRUCTURAL BOLTS SHALL CONFORM TO ASTM A325M, NUTS SHALL CONFORM TO ASTM A563M, WASHERS SHALL CONFORM TO ASTM F436M.
   - 1.7. ANCHOR BOLTS: GRADE A307 OR 300W THREADED ROD CONFORMING TO CSA G40.21-M.
   - 1.8. NON-SHRINK GROUT = PREMIXED COMPOSITION OF NON METALLIC AGGREGATE, CEMENT, WATER REDUCING AND PLASTICIZING AGENTS, OF FLOWABLE CONSISTENCY AND CAPABLE OF ACHIEVING A COMPRESSIVE STRENGTH AT 28 DAYS OF AT LEAST 35 MPA.

F. EXECUTION

1. SLAB-ON-GRADE
   - 1.1. PLACE SLAB-ON-GRADE ON MATERIAL CAPABLE OF SUSTAINING A MINIMUM SLS BEARING PRESSURE OF 25 KPA (500 PSF) WITHOUT SETTLEMENT.
2. CONCRETE
   - 2.1. THE CONTRACTOR SHALL ENSURE THAT REINFORCING STEEL IS ADEQUATELY BRACED AGAINST MOVEMENT DURING CONCRETE PLACING.
   - 2.2. FABRICATE REINFORCEMENT IN ACCORDANCE WITH CAN/CSA A23.1 AND THE RSIC MANUAL OF STANDARD PRACTICE.
   - 2.3. PERFORM FORMING OPERATIONS AND PLACE HARDWARE SO THAT FINISHED CONCRETE WILL BE WITHIN THE TOLERANCES SET OUT IN CAN/CSA-A23.1.
   - 2.4. SAW-CUT SLABS ON GRADE AS SHOWN WITH A MAXIMUM LENGTH BETWEEN SAW-CUTS OF 4.5M (15'-0"). ARRANGE PANELS AS SHOWN OR TO THE CONSULTANT'S APPROVAL.
   - 2.5. AFTER A PERIOD OF AT LEAST 28 DAYS, FILL SAW-CUTS WITH MORTAR CONTAINING CEMENT, SAND AND LATEX BONDING AGENT. ENSURE THAT JOINTS TO BE FILLED ARE CLEAN, DRY AND FREE OF FOREIGN MATTER.
   - 2.6. FOLLOW MANUFACTURER'S INSTRUCTIONS REGARDING INSTALLATION PROCEDURES AND MINIMUM EMBEDMENT OF ANCHORS.
   - 2.7. GROUT BENEATH PLATES BEARING ON CONCRETE WITH AN APPROVED NON_SHRINK FLOWABLE GROUT. CONFORM TO THE MANUFACTURER'S DIRECTIONS FOR MIXING AND PLACING GROUT. COMPLETELY FILL VOIDS BENEATH STEEL BASES ON CONCRETE WITH AN APPROVED NON-SHRINK 36MPA (5KSI) GROUT.
   - 2.8. ALL DOWELS SHALL HAVE MINIMUM EMBEDMENT EQUIVALENT TO THE STRAIGHT TENSION EMBEDMENT LENGTH OR 600 MM (2'-0"), WHICHEVER IS GREATER, UNLESS NOTED OTHERWISE.
   - 2.9. LAP SPLICES FOR WELDED WIRE FABRIC (WWF) SHALL BE:
     - 2.9.1. 152X152 WWF 500 MM (1'-8")
   - 2.10. CONCRETE COVER:
     - 2.10.1. COVER SHALL BE MEASURED FROM THE DEEPEST POINT TEXTURED CONCRETE SURFACE (OR REGLET/REVEAL) TO THE NEAREST DEFORMATION OF REINFORCEMENT. REINFORCEMENT INCLUDES TIES / STIRRUPS AND MAIN REINFORCEMENT.
     - 2.10.2. ALL CONCRETE CAST AGAINST EARTH IS TO HAVE 75 MM (3") COVER, UNO.
   - 2.11. WHERE REINFORCEMENT IS NOT SPECIFICALLY IDENTIFIED ON THE DRAWINGS, PROVIDE 152 X 152 MW18.7 X MW18.7 WELDED WIRE FABRIC AT IN SLABS ON GRADE, OR WALKS AND 51 X 51 MW5.6 X MW5.6 TOPPINGS 60 MM (2½") IN THICKNESS OR GREATER.
   - 2.12. PLACING CONCRETE
     - 2.12.1. CONFORM TO REQUIREMENTS OF CSA A23.1, AND THE FOLLOWING:
       - 2.12.1.1. IMMEDIATELY BEFORE PLACING CONCRETE, CLEAN FORMS AND REINFORCEMENT OF FOREIGN MATTER.
       - 2.12.1.2. DO NOT USE CONCRETE MIXED MORE THAN TWO HOURS AFTER INTRODUCTION OF MIXING WATER.
       - 2.12.1.3. DURING HOT WEATHER CONDITIONS, DO NOT USE CONCRETE MIXED MORE THAN ONE HOUR AFTER INTRODUCTION OF MIXING WATER.
       - 2.12.1.4. ALLOW 24 HOURS MINIMUM AFTER PLACING CONCRETE IN COLUMNS, PIERS OR WALLS BEFORE PLACING CONCRETE IN BEAMS OR SLABS SUPPORTED THEREON.
   - 2.13. CURING CONCRETE
     - 2.13.1. CURE ALL CONCRETE IN ACCORDANCE WITH CSA A23.1, THE CONCRETE SUPPLIERS REQUIREMENTS AND AS SPECIFIED HEREIN.
   - 2.14. PROTECTION
     - 2.14.1. CONFORM TO THE REQUIREMENTS OF CSA A23.1. PROTECT FRESHLY DEPOSITED CONCRETE FROM FREEZING, PREMATURE DRYING AND EXTREMES OF TEMPERATURE. MAINTAIN CONCRETE WITH MINIMAL MOISTURE LOSS AT A RELATIVELY CONSTANT TEMPERATURE FOR THE PERIOD OF TIME NECESSARY FOR THE HYDRATION OF THE CEMENT AND TO ACHIEVE THE SPECIFIED STRENGTH OF THE CONCRETE.
     - 2.14.2. PROVIDE SUFFICIENT INSULATION, AND HEAT AS NECESSARY, TO PREVENT FREEZING OF FROST SUSCEPTIBLE SOIL WHICH LIES AGAINST STRUCTURAL ELEMENTS; IN PARTICULAR PROTECT SOIL BENEATH FOOTINGS AND BEHIND FOUNDATION WALLS UNTIL THE BUILDING IS COMPLETED.
     - 2.14.3. CRACK REPAIR: PRIOR TO COMPLETION OF THE PROJECT AND IN ANY CASE NOT SOONER THAN 28 DAYS AFTER CONCRETE HAS BEEN PLACED. EXAMINE CONCRETE FLOOR SURFACES AND REPAIR ALL MAJOR CRACKS IN THEM. ROUT CRACKS OUT WITH MECHANICAL ROUTER TO 13 MM (½") SQUARE APPROXIMATE CROSS SECTION. THEN CLEAN AND FILL CRACKS IN SAME MANNER AS SAW CUTS IN SLAB ON GRADE.
3. STRUCTURAL STEEL
   - 3.1. CENTER BEARING PLATES UNDER BEAMS UNLESS NOTED OTHERWISE.
   - 3.2. BEARING PLATE DIMENSION GIVEN FIRST INDICATES SIDE PARALLEL TO BEAM WEB.
   - 3.3. FORCES INDICATED ARE FACTORED UNLESS NOTED OTHERWISE.
   - 3.4. PROVIDE WELDED STIFFENER PLATES ON BOTH SIDES OF THE WEB OF THE BEAMS AT POINTS OF CONCENTRATED LOAD INCLUDING BEAMS SUPPORTING COLUMNS OR RUNNING OVER TOP OF COLUMNS, UNLESS SHOWN BY DESIGN. THAT STIFFENERS ARE NOT REQUIRED.
   - 3.5. LENGTH FOR ANCHOR RODS, STRAP ANCHORS AND SIMILAR DEVICES IS GIVEN FOR THE STRAIGHT LENGTH WITHOUT HOOK. PROVIDE A 75 MM (3") HOOK FOR ALL ANCHOR RODS AND A 50 MM (2") HOOK FOR ALL STRAP ANCHORS. TYPICAL UNLESS NOTED OTHERWISE
   - 3.6. DESIGN ALL BEAM CONNECTIONS FOR THE FACTORED VERTICAL SHEAR FORCE NOTED ON PLAN. WHERE NO FORCE IS INDICATED, DESIGN CONNECTIONS FOR A VERTICAL SHEAR FORCE OF 75 KN (50KN FOR C150 AND C100 SECTIONS). IN ADDITION, A MINIMUM OF TWO BOLTS ARE TO BE USED IN ALL BEAM CONNECTIONS.
   - 3.7. UNLESS OTHERWISE NOTED, THE FABRICATOR'S ENGINEER SHALL DESIGN AND BE SOLELY RESPONSIBLE FOR ALL CONNECTIONS BETWEEN ALL STEEL MEMBERS INCLUDING, BUT NOT LIMITED TO: COLUMNS, BEAMS, GIRDERS, TRUSSES AND BRACES, AND BETWEEN SUCH MEMBERS AS SPANDREL ANGLES AND BEAMS, HANGERS, STIFFENERS, ETC., AND THEIR SUPPORTING MEMBERS BE THEY STEEL OR CONCRETE.
   - 3.8. UNLESS OTHERWISE NOTED, THE FABRICATOR'S ENGINEER SHALL ALSO DESIGN AND BE RESPONSIBLE FOR SPECIFYING STIFFENERS, DOUBLER PLATES AND THE LIKE, REQUIRED TO MAINTAIN THE LOCAL STRENGTH AND STABILITY OF A MEMBER AND WHERE THESE STIFFENERS AND DOUBLER PLATES BECOME AN INTEGRAL PART OF THE CONNECTION OR WHERE THEY AFFECT THE CONNECTION OF OTHER STEEL FRAMING MEMBERS. TYPICAL EXAMPLES INCLUDE, BUT ARE NOT LIMITED TO: CRANKED SECTIONS, MOMENT CONNECTIONS BETWEEN COLUMNS AND BEAMS, CONNECTIONS TO HOLLOW STRUCTURAL SECTIONS, AND THE LIKE. WHERE CONNECTIONS ARE EXPOSED TO VIEW, THE DETAILING OF STIFFENERS, DOUBLE PLATES AND THE LIKE IS SUBJECT TO REVIEW BY THE ARCHITECT.
   - 3.9. PAINT ALL STRUCTURAL STEEL TO REQUIREMENTS OF CISC/CPMA 2-75. TOUCH UP ALL FIELD WELDS.
   - 3.10. ALL STRUCTURAL STEEL EXPOSED TO WEATHER SHALL BE GALVANIZED IN ACCORDANCE WITH CSA G164. TOUCH UP ALL WELDS AND DAMAGED GALVANIZING WITH ZINC-RICH PRIMER.
   - 3.11. ALL WELDS SHALL CONFORM TO CSA STANDARD W59.
   - 3.12. ALL WELDS EXPOSED TO VIEW SHALL BE GROUND SMOOTH.
   - 3.13. DO NOT SPLICE STRUCTURAL STEEL SECTIONS WITHOUT PRIOR APPROVAL OF THE CONSULTANT. ALL SPLICES SHALL DEVELOP THE FULL CAPACITY OF THE SECTION AND ARE TO BE TESTED BY NON DESTRUCTIVE METHODS, BY AN INDEPENDENT INSPECTION AND TESTING COMPANY, AT THE CONTRACTOR'S EXPENSE.
   - 3.14. SEE ARCHITECTURAL DRAWINGS FOR FIREPROOFING REQUIREMENTS. CONFIRM COMPATIBILITY OF FIREPROOFING MATERIAL WITH STEEL PAINT.
   - 3.15. CONNECTIONS:
     - 3.15.1. USE TYPES OF SHOP OR FIELD CONNECTIONS SHOWN ON THE DOCUMENTS, OR IN THE ABSENCE OF SUCH INFORMATION, USE THE MOST APPROPRIATE TYPE OF CONNECTIONS GIVEN THE APPLIED LOADS AND THE ARRANGEMENT OF MEMBERS.
   - 3.16. ALL STRUCTURAL STEEL BEAMS GREATER THAN 7200 MM (23'-6") IN LENGTH ARE TO HAVE AN UPWARD CAMBER OF 20 MM (3/4"), UNLESS NOTED OTHERWISE. BEAMS LESS THAN 7200 MM (23'-6") IN LENGTH ARE NOT TO BE CAMBERED, UNLESS NOTED OTHERWISE. BEAMS ARE TO BE FABRICATED SUCH THAT ANY CURVATURE OF THE BEAMS DUE TO THE FABRICATION PROCESS IS UPWARD WHEN THE BEAM IS ERECTED.
   - 3.17. UNLESS NOTED OTHERWISE ON THE DRAWINGS, PROVIDE A 10 MM (3/8") CAP PLATE FOR ALL HOLLOW BUILT-UP MEMBERS. PROVIDE CONTINUOUS SEAL WELD AROUND CAP PLATE.
   - 3.18. SEAL ALL HOLLOW BUILT-UP MEMBERS EXPOSED TO WEATHER WITH CONTINUOUS SEAL WELDS, INCORPORATING STRUCTURAL WELDS WHERE SHOWN OR REQUIRED.
4. ALTERATIONS AND/OR CONNECTIONS TO EXISTING STRUCTURE
   - 4.1. PROPOSED SCHEDULE OF WORK TO BE COORDINATED WITH ALL SUBTRADES, THE CONSULTANT AND OWNER.
   - 4.2. PROPOSED SEQUENCE OF WORK TO BE SUBMITTED TO THE CONSULTANT FOR REVIEW PRIOR TO START OF WORK.
   - 4.3. INSPECT THE EXISTING BUILDING AND BECOME THOROUGHLY FAMILIAR WITH THE EXISTING CONDITIONS.
   - 4.4. PRIOR TO PROCEEDING WITH THE WORK, DETERMINE THE EXACT FOUNDING ELEVATIONS OF EXISTING FOOTINGS ADJACENT TO THE NEW WORK. REPORT THESE FINDINGS TO THE CONSULTANT.
   - 4.5. PRIOR TO FABRICATION OF STRUCTURAL STEEL, OPEN UP ALL AREAS WHERE CONNECTIONS ARE TO BE MADE TO EXISTING WORK AND TAKE FIELD MEASUREMENTS. MODIFY METHODS FOR CONNECTING TO SUIT SITE CONDITIONS FOUND AND TO THE APPROVAL OF THE CONSULTANT. CARRY OUT LOCAL REPAIRS TO THE EXISTING WORK AS NECESSARY AND AS DIRECTED BY THE CONSULTANT.
   - 4.6. DO NOT CUT CONCRETE REINFORCEMENT UNLESS REVIEWED AND APPROVED BY THE CONSULTANT.
   - 4.7. WHERE REQUIRED TO AVOID CUTTING EXISTING REINFORCEMENT, MODIFY THE LAYOUT OF NEW THROUGH BOLTS, EXPANSION ANCHORS AND OTHER ANCHORING DEVICES.
   - 4.8. MAKE GOOD THE EXISTING WORK.
5. CUTTING AND CORING OF EXISTING STRUCTURE
   - 5.1. PRIOR TO CUTTING AND CORING ANY OPENINGS IN THE EXISTING BUILDING, PROVIDE THE CONSULTANT WITH A SLEEVING DRAWING INDICATING THE SIZE AND LOCATION OF OPENING RELATIVE TO BUILDING GRID LINES. EXISTING OPENINGS IN THE VICINITY OF THE NEW OPENING MUST ALSO BE SHOWN.
   - 5.2. ALL DIMENSIONS PROVIDED TO THE CONSULTANT ARE TO BE CONFIRMED WITH THE APPROPRIATE CONTRACTOR (MECHANICAL OR ELECTRICAL) PRIOR TO CUTTING/CORING.
   - 5.3. ANY REVISIONS TO THE DIMENSIONS BY THE CONSULTANT MUST BE REVIEWED BY THE APPROPRIATE CONTRACTOR PRIOR TO CUTTING/CORING.
   - 5.4. THE CONSULTANT MAY IDENTIFY AREAS WHERE EXISTING REINFORCEMENT AND EMBEDDED SERVICES MUST BE LOCATED PRIOR TO CUTTING/CORING. THIS REINFORCEMENT IS TO BE LOCATED BY A POSITIVE MEANS, (i.e. X-RAYING, LOCAL CHIPPING OF SLAB- WHERE PERMITTED BY THE CONSULTANT-, USE OF COVER METER).
   - 5.5. AFTER REINFORCEMENT AND EMBEDDED SERVICES HAS BEEN LOCATED IN THESE AREAS, NOTIFY CONSULTANT WHO WILL REVIEW AND APPROVE LOCATION PRIOR TO CUTTING/CORING. MAKE ANY NECESSARY ADJUSTMENTS TO THE HOLE LOCATION AS DIRECTED BY THE CONSULTANT.
   - 5.6. FOR ANY OPENINGS WHICH ARE TO BE SAWCUT INTO THE EXISTING STRUCTURE, PRE-DRILL THE CORNERS USING A 100 mm DIAMETER CORE DRILL. DO NOT OVERCUT CORNERS OF OPENING.
   - 5.7. ALL PRICES FOR CUTTING/CORING ARE TO INCLUDE ANY COSTS ASSOCIATED WITH X-RAYING, CHIPPING, ETC.
   - 5.8. FOR ANY AREAS WHERE REINFORCEMENT IS CUT, THE CONTRACTOR IS TO INDICATE THE DIRECTION AND LAYER OF REINFORCEMENT ON THE AS-BUILT SLEEVING DRAWINGS.
   - 5.9. FOR LARGE OPENINGS THROUGH A FLOOR AREA, ADDITIONAL REINFORCEMENT OF THE SLAB MAY BE REQUIRED. THE CONSULTANT WILL ISSUE ADDITIONAL DETAILS AS REQUIRED.

G. QUALITY CONTROL

1. GENERAL
   - 1.1. IMPLEMENT A SYSTEM OF QUALITY CONTROL TO ENSURE THAT THE MINIMUM STANDARDS SPECIFIED HEREIN ARE ATTAINED.
   - 1.2. BRING TO THE ATTENTION OF THE CONSULTANT ANY DEFECTS IN THE WORK OR DEPARTURES FROM THE CONTRACT DOCUMENTS, WHICH MAY OCCUR DURING CONSTRUCTION. THE CONSULTANT WILL DECIDE UPON CORRECTIVE ACTION AND GIVE RECOMMENDATIONS IN WRITING.
   - 1.3. THE CONSULTANT'S GENERAL REVIEW DURING CONSTRUCTION AND INSPECTION AND TESTING BY INDEPENDENT INSPECTION AND TESTING AGENCIES REPORTING TO THE CONSULTANT ARE BOTH UNDERTAKEN TO INFORM THE CLIENT OF THE CONTRACTOR'S PERFORMANCE AND SHALL IN NO WAY AUGMENT THE CONTRACTOR'S QUALITY CONTROL OR RELIEVE THE CONTRACTOR OF CONTRACTUAL RESPONSIBILITY.
2. NOTIFICATION
   - 2.1. PRIOR TO COMMENCING SIGNIFICANT SEGMENTS OF THE WORK, GIVE THE CONSULTANT AND INDEPENDENT INSPECTION AND TESTING COMPANIES APPROPRIATE NOTIFICATION (MINIMUM 24 HOURS) SO AS TO AFFORD THEM REASONABLE OPPORTUNITY TO REVIEW THE WORK. FAILURE TO MEET THIS REQUIREMENT MAY BE CAUSE FOR THE CONSULTANT TO CLASSIFY THE WORK AS DEFECTIVE.
3. INSPECTION AND TESTING
   - 3.1. THE CLIENT WILL APPOINT AN INDEPENDENT INSPECTION AND TESTING COMPANY TO MAKE INSPECTIONS OR PERFORM TESTS AS THE CLIENT DIRECTS. THE INDEPENDENT INSPECTION AND TESTING COMPANIES SHALL BE RESPONSIBLE ONLY TO THE CLIENT AND SHALL MAKE ONLY SUCH INSPECTIONS OR TESTS AS THE CLIENT MAY DIRECT. AUTHORIZED INSPECTION AND TESTING SHALL BE PAID FOR BY THE OWNER.
4. DEFECTIVE MATERIALS AND WORK
   - 4.1. WHERE EVIDENCE EXISTS THAT DEFECTIVE WORK HAS OCCURRED OR THAT WORK HAS BEEN CARRIED OUT INCORPORATING DEFECTIVE MATERIALS, THE CONSULTANT MAY HAVE TESTS, INSPECTIONS OR SURVEYS PERFORMED, ANALYTICAL CALCULATIONS OF STRUCTURAL STRENGTH MADE, AND THE LIKE, IN ORDER TO HELP DETERMINE WHETHER THE WORK MUST BE CORRECTED OR REPLACED. TESTS, INSPECTIONS, SURVEYS, OR CALCULATIONS CARRIED OUT UNDER THESE CIRCUMSTANCES WILL BE MADE AT THE CONTRACTOR'S EXPENSE, REGARDLESS OF THEIR RESULTS, WHICH MAY BE SUCH THAT, IN THE CONSULTANT'S OPINION, THE WORK MAY BE ACCEPTABLE.
   - 4.2. ALL TESTING SHALL BE CONDUCTED IN ACCORDANCE WITH THE REQUIREMENTS OF THE 2024 ONTARIO BUILDING CODE, EXCEPT WHERE THIS WOULD, IN THE CONSULTANT'S OPINION, CAUSE UNDUE DELAY OR GIVE RESULTS NOT REPRESENTATIVE OF THE REJECTED MATERIAL IN PLACE. IN THIS CASE, THE TESTS SHALL BE CONDUCTED IN ACCORDANCE WITH THE STANDARDS GIVEN BY THE CONSULTANT.
   - 4.3. MATERIALS OR WORK, WHICH FAIL TO MEET SPECIFIED REQUIREMENTS, MAY BE REJECTED BY THE CONSULTANT WHENEVER FOUND AT ANY TIME PRIOR TO FINAL ACCEPTANCE OF THE WORK REGARDLESS OF PREVIOUS INSPECTION. IF REJECTED, DEFECTIVE MATERIALS OR WORKMANSHIP SHALL BE PROMPTLY REMOVED AND REPLACED OR REPAIRED TO THE SATISFACTION OF THE CONSULTANT, AT NO EXPENSE TO THE OWNER.

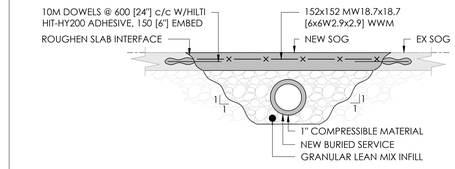

CS2	SLAB ON GRADE TRENCHING

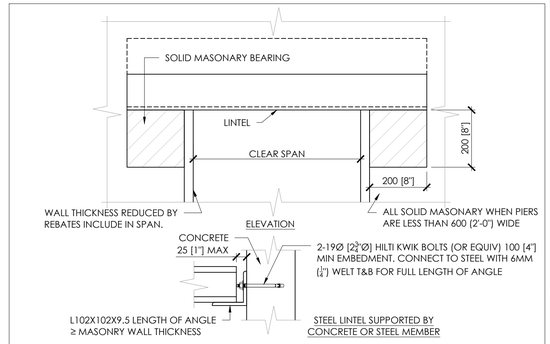

WALL THICKNESS	CLEAR SPAN				DETAIL
	UPTO 1200 (4'-0")	> 1200 TO 1800 (4'-0" TO 6'-0")	> 1800 TO 2400 (6'-0" TO 8'-0")	> 2400 TO 3000 (8'-0" TO 10'-0")	
140 [5½"]	2 L89X64X6.4	2 L89X64X7.9	2 L89X64X9.5	2 L89X64X13	LLV
190 [7½"]	2 L127X89X7.9	2 L127X89X9.5	2 L127X89X13	2 L127X89X13	LLV
240 [9½"]	1 L102X76X7.9 + 1 L127X76X7.9	1 L102X102X9.5 + 1 L127X76X9.5	1 L102X102X11 + 1 L127X89X11	1 L102X152X13 + 1 L127X127X13	102 & 127 LEGS HORZ
290 [11½"]	2 L127X127X7.9	2 L127X127X9.5	2 L127X127X11	2 L127X127X13	

LT3	LINTEL FOR LOAD BEARING BLOCK WALL

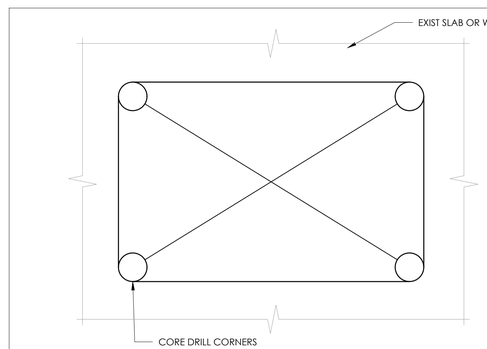

NOTES:

1. ESTABLISH LOCATION OF PROPOSED OPENING AND LOCATE EXISTING REINFORCEMENT AS REQUIRED.
2. OBTAIN APPROVAL FROM CONSULTANT TO CUT OPENING IN PROPOSED LOCATION.
3. CORE DRILL 4" (100mm) DIA. HOLE AT CORNERS OF NEW OPENING.
4. SAW CUR OPENING TO HOLE (DO NOT OVERCUT AT CORNERS)
5. CHIP CORNERS OUT SQUARE AND SMOOTH, AS REQUIRED.
6. MAKE GOOD EDGES OF OPENING AS REQUIRED.

OP1	SAWCUT OF OPENING IN EXISTING SLAB OR WALL

NO.	DATE	ISSUED
4	2026.01.06	ISSUED FOR TENDER
3	2025.12.11	ISSUED FOR 90% CD
2	2025.12.08	ISSUED FOR PERMIT
1	2025.05.16	ISSUED FOR COORDINATION

NOTES

CONTRACTOR MUST CHECK AND VERIFY ALL DIMENSIONS SHOWN ON DRAWINGS WITH SITE CONDITIONS, PRIOR TO THE WORK AND NOTIFY THE ARCHITECT OF DIFFERENCES. AWAIT CLARIFICATION BEFORE CONTINUING.

DO NOT SCALE DRAWINGS.

ALL DRAWINGS, SPECIFICATIONS AND RELATED DOCUMENTS ARE THE COPYRIGHT PROPERTY OF THE ARCHITECT AND MUST BE RETURNED UPON REQUEST. REPRODUCTION OF DRAWINGS, SPECIFICATIONS AND RELATED DOCUMENTS IN PART OR IN WHOLE IS FORBIDDEN WITHOUT THE ARCHITECT'S WRITTEN PERMISSION.

THESE DRAWINGS ARE FOR PERMIT PURPOSES ONLY. THEY INDICATE DESIGN INTENT ONLY AND DO NOT FULLY DESCRIBE OR SPECIFY ALL CONDITIONS, MATERIAL OR ASSEMBLIES. REQUEST FURTHER INFORMATION FROM ARCHITECT PRIOR TO COMMENCING CONSTRUCTION AS REQUIRED.

ARCHITECT:
CARTER AI
DAVID CARTER ARCHITECTS INC.
688 Richmond St W, Suite 303 Toronto ON M6J 1C5 | 416 977 6300

MECHANICAL AND ELECTRICAL ENGINEERING:
QUASAR CONSULTING GROUP
250 Rowntree Dairy Road Woodbridge, ON L4L 9J7

HONEYCOMB

CLIENT:
.\IMAGES\Logos\CGMH.png

CGMH FOUNDATION AND PHYSIO CLINIC

453 HUME STREET, COLLINGWOOD ON

PROJECT NORTH

GENERAL NOTES & TYPICAL DETAILS

ENTERED: SS	DRAWING NO.
CHECKED: WP	S001
DATE: 2026.01.06	
PROJECT NO. 25.287	

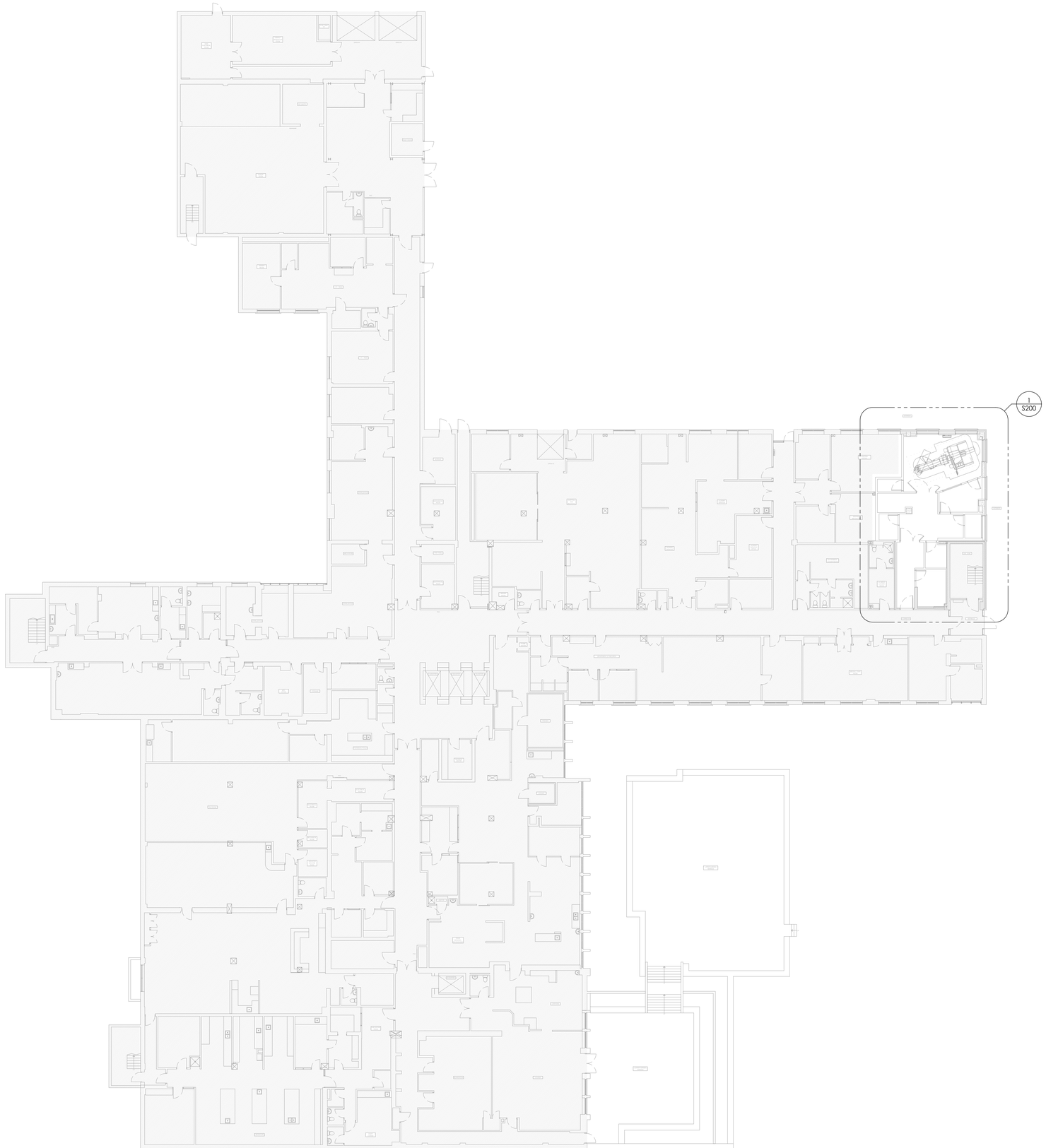

NO.	DATE	ISSUED
4	2026.01.06	ISSUED FOR TENDER
3	2025.12.11	ISSUED FOR 90% CD
2	2025.12.08	ISSUED FOR PERMIT
1	2025.05.16	ISSUED FOR COORDINATION

NOTES

CONTRACTOR MUST CHECK AND VERIFY ALL DIMENSIONS SHOWN ON DRAWINGS WITH SITE CONDITIONS, PRIOR TO THE WORK AND NOTIFY THE ARCHITECT OF DIFFERENCES. AWAIT CLARIFICATION BEFORE CONTINUING.

DO NOT SCALE DRAWINGS.

ALL DRAWINGS, SPECIFICATIONS AND RELATED DOCUMENTS ARE THE COPYRIGHT PROPERTY OF THE ARCHITECT AND MUST BE RETURNED UPON REQUEST. REPRODUCTION OF DRAWINGS, SPECIFICATIONS AND RELATED DOCUMENTS IN PART OR IN WHOLE IS FORBIDDEN WITHOUT THE ARCHITECT'S WRITTEN PERMISSION.

THESE DRAWINGS ARE FOR PERMIT PURPOSES ONLY. THEY INDICATE DESIGN INTENT ONLY AND DO NOT FULLY DESCRIBE OR SPECIFY ALL CONDITIONS, MATERIAL OR ASSEMBLIES. REQUEST FURTHER INFORMATION FROM ARCHITECT PRIOR TO COMMENCING CONSTRUCTION AS REQUIRED.

ARCHITECT:
CARTER AI
DAVID CARTER ARCHITECTS INC.
688 Richmond St W, Suite 303 Toronto ON M6J 1C5 | 416 977 6300

MECHANICAL AND ELECTRICAL ENGINEERING:
QUASAR CONSULTING GROUP
250 Rowntree Dairy Road Woodbridge, ON L4L 9J7

HONEYCOMB

CLIENT:
.\IMAGES\Logos\CGMH.png

CGMH FOUNDATION
AND PHYSIO CLINIC

453 HUME STREET, COLLINGWOOD ON

PROJECT NORTH

SITE PLAN

ENTERED: SS
CHECKED: WP
DATE: 2026.01.06
PROJECT NO. 25.287

DRAWING NO. S100

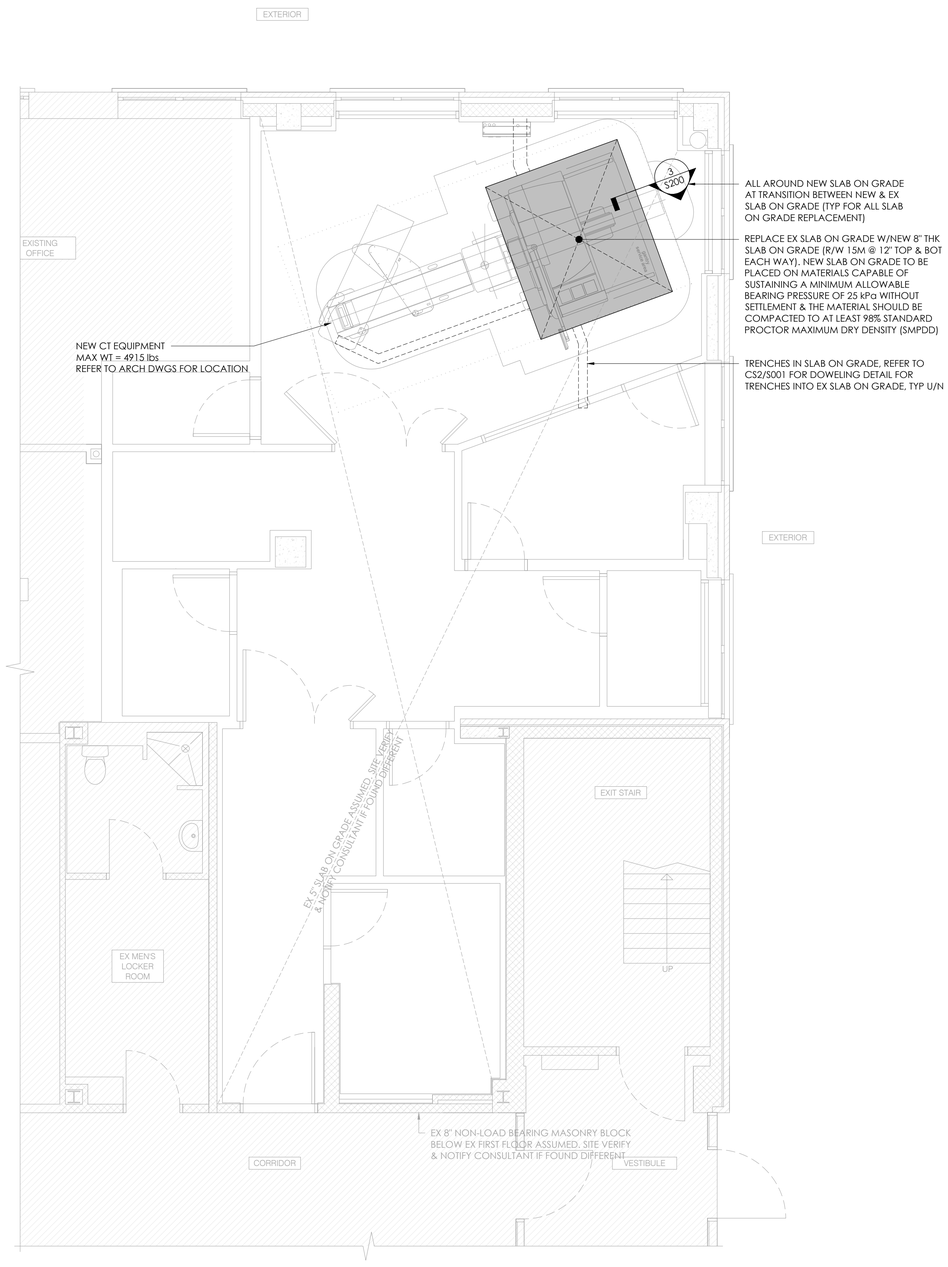

1 S200 ENLARGED PARTIAL LEVEL B1 FLOOR PLAN
1/4" = 1'-0"

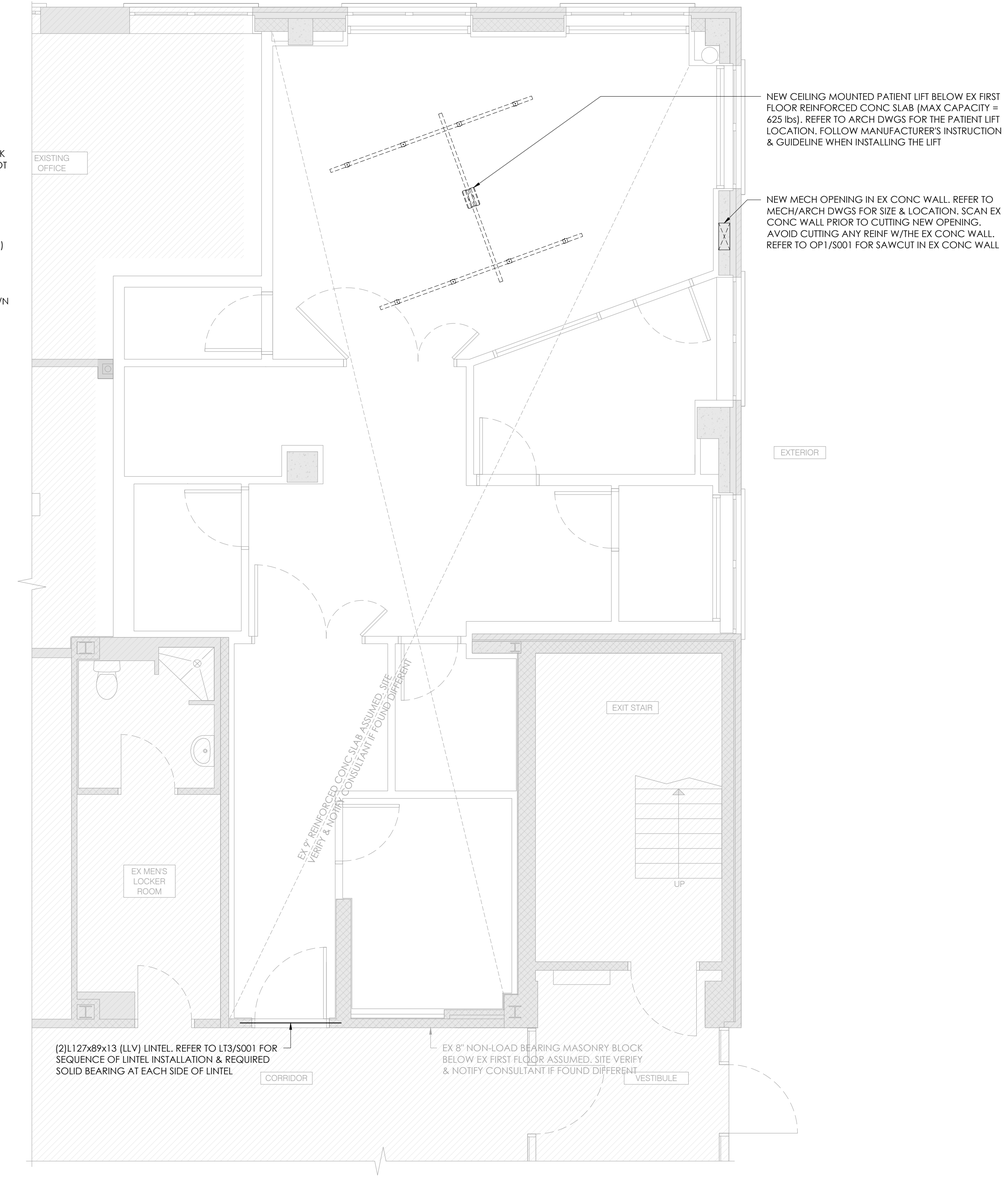

2 S200 ENLARGED PARTIAL LEVEL 1 FLOOR PLAN
1/4" = 1'-0"

NOTES:

1. A**LL FRAMING SHOWN IS LOOKING DOWN.**
2. WE HAVE ASSUMED THAT THE EXISTING STRUCTURE IS IN GOOD CONDITION. SITE VERIFY ALL EXISTING CONDITIONS SHOWN AND NOTIFY CONSULTANT IF FOUND DIFFERENT.
3. ASSUMED ORIGINAL DESIGN LOADS:
   - 3.1. ROOF SNOW LOAD = 54 psf (2.56 kPa)
   - 3.2. ROOF DEAD LOAD = 32 psf (1.5 kPa)
   - 3.3. FLOOR LIVE LOAD (PATIENT ROOMS & OFFICE) = 50 psf (2.4 kPa)
   - 3.4. FLOOR LIVE LOAD (CORRIDOR & STAIRS) = 100 psf (4.8 kPa)
   - 3.5. FLOOR DEAD LOAD = 42 psf (2.0 kPa)
4. REFER TO MECHANICAL DRAWINGS FOR EXACT LOCATIONS, SPECIFICATIONS AND DIMENSIONS.
5. ALL FIELD WELDING SHALL BE INSPECTED BY A 3RD PARTY AT CONTRACTORS EXPENSE.
6. HONEYCOMB GROUP HAS REVIEWED THE BASE BUILDING STRUCTURE FOR THE NEW LOAD IMPOSED BY THE PATIENT LIST. IT IS OUR OPINION THAT THE EXISTING STRUCTURE CAN SUPPORT THE IMPOSED LOADS WITHOUT REINFORCEMENT.
7. MAKE GOOD THE EXISTING WORK.
8. SCAN EXISTING CONCRETE SLAB PRIOR TO INSTALLATION OF STEEL PLATES. AVOID DAMAGING OR CUTTING ANY REINFORCEMENT WITHIN THE EXISTING CONCRETE SLAB.
9. **REFER TO CS2/S001 FOR SLAB ON GRADE TRENCHING.**

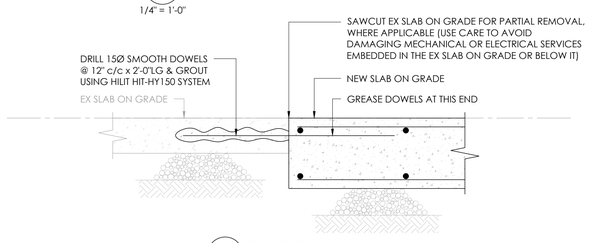

3 S200 JOINT BETWEEN NEW & EXISTING SLAB ON GRADE
1-1/2" = 1'-0"

NO.	DATE	ISSUED
4	2026.01.06	ISSUED FOR TENDER
3	2025.12.11	ISSUED FOR 90% CD
2	2025.12.08	ISSUED FOR PERMIT
1	2025.05.16	ISSUED FOR COORDINATION

NOTES

CONTRACTOR MUST CHECK AND VERIFY ALL DIMENSIONS SHOWN ON DRAWINGS WITH SITE CONDITIONS, PRIOR TO THE WORK AND NOTIFY THE ARCHITECT OF DIFFERENCES. AWAIT CLARIFICATION BEFORE CONTINUING.

DO NOT SCALE DRAWINGS.

ALL DRAWINGS, SPECIFICATIONS AND RELATED DOCUMENTS ARE THE COPYRIGHT PROPERTY OF THE ARCHITECT AND MUST BE RETURNED UPON REQUEST. REPRODUCTION OF DRAWINGS, SPECIFICATIONS AND RELATED DOCUMENTS IN PART OR IN WHOLE IS FORBIDDEN WITHOUT THE ARCHITECT'S WRITTEN PERMISSION.

THESE DRAWINGS ARE FOR PERMIT PURPOSES ONLY. THEY INDICATE DESIGN INTENT ONLY AND DO NOT FULLY DESCRIBE OR SPECIFY ALL CONDITIONS, MATERIAL OR ASSEMBLIES. REQUEST FURTHER INFORMATION FROM ARCHITECT PRIOR TO COMMENCING CONSTRUCTION AS REQUIRED.

ARCHITECT:
CARTER AI
DAVID CARTER ARCHITECTS INC.
688 Richmond St W, Suite 303 Toronto ON M6J 1C5 | 416 977 6300

MECHANICAL AND ELECTRICAL ENGINEERING:
250 Rowntree Dairy Road Woodbridge, ON L4L 9J7

HONEYCOMB

CLIENT:
.\IMAGES\Logos\CGMH.png

CGMH FOUNDATION AND PHYSIO CLINIC

453 HUME STREET, COLLINGWOOD ON

PROJECT NORTH

LEVEL B1 & LEVEL 1 FLOOR PLAN

ENTERED: SS
CHECKED: WP
DATE: 2026.01.06
PROJECT NO. 25.287

DRAWING NO. S200

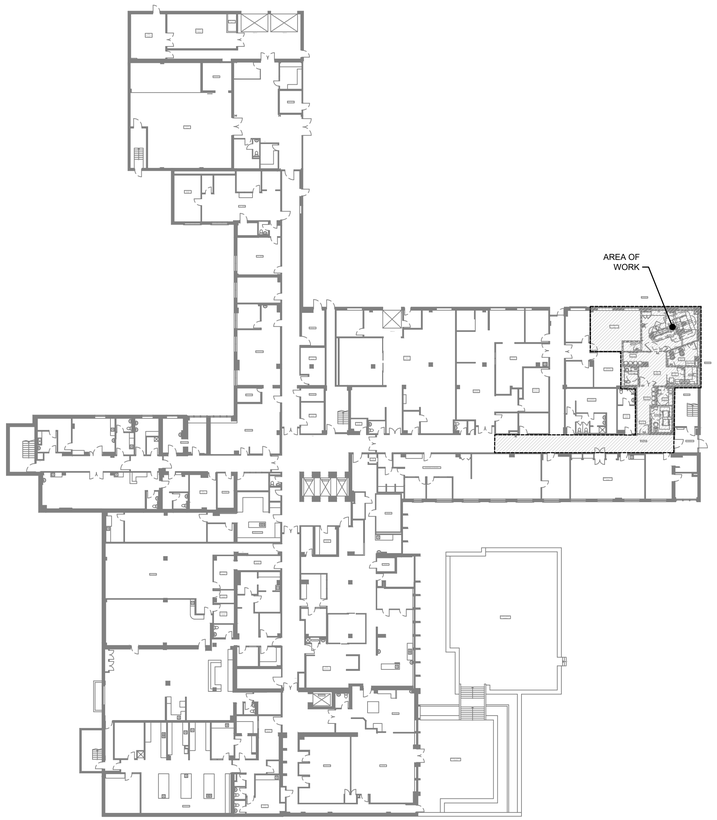

1 M001 KEY PLAN
SCALE: 1/32" = 1'-0"

MECHANICAL DRAWING LIST

Sheet Number	Sheet Title
M001	KEY PLAN LENGENDS AND NOTES
M200	MECHANICAL BELOW GRADE PLUMBING PLAN - DEMOLITION
M201	MECHANICAL PLUMBING PLAN - DEMOLITION
M202	MECHANICAL BELOW GRADE PLUMBING PLAN - NEW WORK
M203	MECHANICAL PLUMBING PLAN - NEW WORK
M300	MECHANICAL HVAC & FIRE PROTECTION PLAN - DEMOLITION
M301	MECHANICAL HVAC & FIRE PROTECTION - NEW WORK
M400	MECHANICAL DETAILS I
M401	MECHANICAL DETAILS II
M500	MECHANICAL SCHEDULES

NOTES

1. READ AND INTERPRET ALL MECHANICAL DRAWINGS IN CONJUNCTION WITH SIEMENS INSTALLATION DRAWINGS AND PPG DOCUMENT. NOTE ANY DISCREPANCIES TO CONSULTANTS PRIOR TO CONDUCTING WORK.
2. COORDINATE ALL MECHANICAL WORK WITH OTHER TRADES.

MECHANICAL LEGEND

SYMBOL	DESCRIPTION
	GENERAL
	EXISTING TO REMAIN
	EXISTING TO BE DEMOLISHED
R	EXISTING TO BE REMOVED FOR RELOCATION
R	EXISTING RELOCATED IN NEW WORK
	NEW WORK
CTE	CONNECT TO EXISTING
	AIRFLOW / PIPE FLOW DIRECTION
DN	PIPE TURNING DOWN
	PIPE TURNING UP
	PRESSURE REDUCING VALVE
T	ROOM THERMOSTAT
H	ROOM HUMIDISTAT
	PUMP
	AUTOMATIC CONTROL VALVE - TWO WAY
	AUTOMATIC CONTROL VALVE - THREE WAY
	ISOLATION VALVE
	BALANCING VALVE
R	CHECK VALVE
	STRAINER - OVER 50MM WITH VALVED FLUSHING DRAIN
	PIPE BRANCH OFF TOP
	PIPE BRANCH OFF BOTTOM
	RELIEF VALVE (PIPE TO DRAIN)
	VACUUM BREAKER VALVE
	VENTURI VALVE
	PRESSURE GAUGE
	TEMPERATURE GAUGE
	STAINLESS STEEL BRAIDED FLEXIBLE HOSES
CAP	CAP
	SOLENOID VALVE
	SOLENOID VALVE
	FUSIBLE LINK VALVE
	ELECTRIC HEAT TRACING

THIS LEGEND IS GENERIC. ALL SYMBOLS LISTED MAY NOT BE APPLICABLE FOR THIS PROJECT. REFER TO FLOOR PLANS TO DETERMINE USED DEVICES AND EQUIPMENT.

MECHANICAL LEGEND

SYMBOL	DESCRIPTION
	CONTROLS
SF	SUPPLY FAN
RF	RETURN EXHAUST FAN
EF	EXHAUST FAN
H/C	HEATING COIL
C/C	COOLING COIL
P/C	PRE-HEAT COIL
	FILTERS
SA	SUPPLY AIR
EA	EXHAUST AIR
OA	OUTDOOR AIR
RA	RETURN AIR
MD	MOTORIZED DAMPER
MSP	MOTOR STARTER PANEL
MCC	MOTOR CONTROL CENTER
	HUMIDIFIER
NO	NORMALLY OPEN
NC	NORMALLY CLOSED
VFD	VARIABLE FREQUENCY DRIVE
	ACTUATOR CLOSED END SWITCH
	ACTUATOR OPEN END SWITCH
FS	FLOW SWITCH
LS	LEVEL SWITCH
PS	PRESSURE SWITCH
NC	ACTUATOR NORMALLY CLOSED DE-ENERGIZED POSITION

THIS LEGEND IS GENERIC. ALL SYMBOLS LISTED MAY NOT BE APPLICABLE FOR THIS PROJECT. REFER TO FLOOR PLANS TO DETERMINE USED DEVICES AND EQUIPMENT.

MECHANICAL LEGEND

SYMBOL	DESCRIPTION
	HEATING & COOLING
HWR	HEATING WATER RETURN
HWS	HEATING WATER SUPPLY
HGR	HEATING GLYCOL RETURN
HGS	HEATING GLYCOL SUPPLY
HTWR	HIGH TEMPERATURE HEATING WATER RETURN
HTWS	HIGH TEMPERATURE HEATING WATER SUPPLY
HTGR	HIGH TEMPERATURE HEATING GLYCOL RETURN
HTGS	HIGH TEMPERATURE HEATING GLYCOL SUPPLY
CWR	CONDENSER WATER RETURN
CWS	CONDENSER WATER SUPPLY
CHR	CHILLED WATER RETURN
CHS	CHILLED WATER SUPPLY
CHGR	CHILLED GLYCOL RETURN
CHGS	CHILLED GLYCOL SUPPLY
CNDR	CONDENSATE DRAIN
PC	PUMPED CONDENSATE
REFR	REFRIGERANT GAS
REFS	REFRIGERANT LIQUID
LPS	LOW PRESSURE STEAM
LPC	LOW PRESSURE CONDENSATE
HPS	HIGH PRESSURE STEAM
HPC	HIGH PRESSURE CONDENSATE
V	VENT
ST-V	STEAM VENT
GEOS	GEO-EXCHANGE SUPPLY
GEOR	GEO-EXCHANGE RETURN
FOS	FUEL OIL SUPPLY
FOR	FUEL OIL RETURN
FOV	FUEL OIL VENT
FOO	FUEL OIL OVERFLOW
BB - XXX	ELECTRIC BASEBOARD HEATER OUTPUT AS SHOWN (KW)
ECH	ELECTRIC CABINET HEATER
CUH	CABINET HEATER
UH	UNIT HEATER
CV 1200-5.6	CONVECTOR - LENGTH - HEAT OUTPUT (KW)
WF 1200-5.6	WALL FIN - LENGTH - HEAT OUTPUT (KW)
	UNION
	MANUAL AIR VENT
	AUTOMATIC AIR VENT
	EXPANSION COMPENSATOR
	EXPANSION SWING
	PIPE ANCHOR
	PIPE GUIDE
	PIPE SLEEVE
	FLOAT & THERMOSTATIC TRAP
	INVERTED BUCKET TRAP
	ELECTRIC TRACING
TAG	RADIANT PANEL - 8 DENOTES DEPTH, 600MM DENOTES HEIGHT, 1100MM DENOTES LENGTH & 2.1 HEAT OUTPUT (KW)

THIS LEGEND IS GENERIC. ALL SYMBOLS LISTED MAY NOT BE APPLICABLE FOR THIS PROJECT. REFER TO FLOOR PLANS TO DETERMINE USED DEVICES AND EQUIPMENT.

MECHANICAL LEGEND

SYMBOL	DESCRIPTION
	CONTROLS
NO	ACTUATOR NORMALLY OPEN DE-ENERGIZED POSITION
	ACTUATOR FAIL OPEN POSITION
	ACTUATOR FAIL CLOSED POSITION
FL	ACTUATOR FAIL LAST POSITION
	TWO-POSITION ACTUATOR
	MODULATING ACTUATOR
P	PRESSURE SENSOR
DP	DIFFERENTIAL PRESSURE SENSOR
VS	VELOCITY SENSOR
H	HUMIDITY SENSOR
T	TEMPERATURE SENSOR
OS	OCCUPANCY SENSOR
CO	CARBON MONOXIDE SENSOR
NO	NOX SENSOR
O_2	OXYGEN SENSOR
GDP	GAS DETECTION SYSTEM CONTROL PANEL
	VISUAL INDICATOR ALARM
	AUDIBLE INDICATOR ALARM
BAS	BUILDING AUTOMATION SYSTEM
AI	ANALOG INPUT
AO	ANALOG OUTPUT
DI	DIGITAL INPUT
DO	DIGITAL OUTPUT
GP	BAS GRAPHICS POINT
AP	BAS ADJUSTABLE SET POINT
BV	BACNET BINARY VARIABLE
HOA	HAND-OFF-AUTO
	CONTROL WIRING

THIS LEGEND IS GENERIC. ALL SYMBOLS LISTED MAY NOT BE APPLICABLE FOR THIS PROJECT. REFER TO FLOOR PLANS TO DETERMINE USED DEVICES AND EQUIPMENT.

MECHANICAL LEGEND

SYMBOL	DESCRIPTION
	PLUMBING
SAN	SANITARY DRAINAGE - ABOVE GROUND
SAN	SANITARY DRAINAGE - UNDERGROUND
SAN(AR)	SANITARY DRAINAGE (ACID RESISTANT) - ABOVE GROUND
SAN(AR)	SANITARY DRAINAGE (ACID RESISTANT) - UNDERGROUND
STM	STORM DRAINAGE - ABOVE GROUND
STM	STORM DRAINAGE - UNDERGROUND
PD	PUMPED DISCHARGE
	DOMESTIC COLD WATER SUPPLY
	DOMESTIC HOT WATER SUPPLY
	DOMESTIC HOT WATER RECIRC.
TW	TEMPERED WATER
ARV	ACID RESISTANT VENT
V	VENT
G	GAS
RO	REVERSE OSMOSIS PIPING
ISO	RADIO ISOTOPE DRAIN
CA	COMPRESSED AIR
	HEAT TRACING
	RUNNING TRAP
	P-TRAP
ES	EMERGENCY SHOWER
EW	EYE WASH
CO	CLEANOUT IN FLOOR/BELOW GRADE
CO	CLEANOUT IN CEILING
HB	HOSE BIBB
NFHB	NON FREEZE HOSE BIBB
G	SINGLE GAS OUTLET
G	DOUBLE GAS OUTLET
CA	COMPRESSED AIR OUTLET
RD	ROOF DRAIN
CFRD	CONTROL FLOW ROOF DRAIN
VTR	VENT THROUGH ROOF
RWL	RAIN WATER LEADER
TSP	TRAP SEAL PRIME
	SCUPPER DRAIN
MH	MANHOLE
CB	CATCH BASIN
TD	TRENCH GRATE & FRAME
AD	AREA DRAIN
FFD	FUNNEL FLOOR DRAIN
FD	FLOOR DRAIN
HD	HUB DRAIN
FS	FLOOR SINK
TDD	TERRACE DECK DRAIN
FRD	FLOOR DRAIN - FLUSHING RIM
M	WATER METER ASSEMBLY
G	GAS METER
	BACK WATER VALVE
BFP	BACKFLOW PREVENTER
"WC-1"	DENOTES FIXTURE TYPE PER SPECIFICATION

THIS LEGEND IS GENERIC. ALL SYMBOLS LISTED MAY NOT BE APPLICABLE FOR THIS PROJECT. REFER TO FLOOR PLANS TO DETERMINE USED DEVICES AND EQUIPMENT.

MECHANICAL LEGEND

SYMBOL	DESCRIPTION
	FIRE PROTECTION
SP	SPRINKLER LINE
FM	FIRE MAIN
F	STANDPIPE
WFA	WATER FLOW ALARM
SV	SUPERVISED VALVE
PS	PRESSURE SWITCH
	TEST CONNECTION
	SPRINKLER FIRE DEPARTMENT CONNECTION
	PENDENT SPRINKLER HEAD
	UPRIGHT SPRINKLER HEAD
	CONCEALED SPRINKLER HEAD
	FIRE SUPPRESSION SPRINKLER HEAD
	SIDEWALL SPRINKLER HEAD
PIV	POST-INDICATOR VALVE
SVC	SPRINKLER VALVE CABINET
FEC	FIRE EXTINGUISHER CABINET
FHC	FIRE HOSE CABINET
F	FIRE EXTINGUISHER C/W WALL BRACKET
	FIRE HYDRANT C/W SHUT-OFF VALVE
	AIR COMPRESSOR
	PRESSURE SWITCH WATER FLOW ALARM EXCESS PRESSURE PUMP WET ALARM CHECK VALVE TEST & DRAIN VALVE
	WATER FLOW ALARM PRESSURE SWITCH DRY ALARM CHECK VALVE TEST & DRAIN VALVE

THIS LEGEND IS GENERIC. ALL SYMBOLS LISTED MAY NOT BE APPLICABLE FOR THIS PROJECT. REFER TO FLOOR PLANS TO DETERMINE USED DEVICES AND EQUIPMENT.

MECHANICAL LEGEND

SYMBOL	DESCRIPTION
	VENTILATION
FD	FUSIBLE LINK FIRE DAMPER
SD	SMOKE DAMPER
SFD	COMBINATION SMOKE/FIRE DAMPER
BDD	BACK DRAFT DAMPER
BD	BALANCING DAMPER
M	MOTORIZED DAMPER
W x H	RECTANGULAR DUCTWORK - DIMENSION AS SHOWN
XXXØ	ROUND DUCTWORK - DIMENSION AS SHOWN
	RECTANGULAR SUPPLY DUCT UP
	RECTANGULAR EXHAUST/RETURN DUCT UP
	CIRCULAR SUPPLY/OUTDOOR AIR DUCT UP
	CIRCULAR EXHAUST/RETURN AIR DUCT UP
	RECTANGULAR SUPPLY DUCT DOWN
	RECTANGULAR EXHAUST/RETURN DUCT DOWN
	CIRCULAR SUPPLY/OUTDOOR AIR DUCT DOWN
	CIRCULAR EXHAUST/RETURN AIR DUCT DOWN
	MITRED ELBOW WITH TURNING VANES
	SUPPLY GRILLE - DIMENSIONS SHOWN ON SCHEDULE
	EXHAUST/RETURN GRILLE - DIMENSIONS SHOWN ON SCHEDULE
	CEILING SUPPLY AIR DIFFUSER - DIMENSIONS SHOWN ON SCHEDULE
	SUPPLY AIR LINEAR SLOT DIFFUSER - DIMENSIONS SHOWN ON SCHEDULE
	CEILING EXHAUST/RETURN GRILLE - DIMENSIONS SHOWN ON SCHEDULE
	SUPPLY AIR ROUND DIFFUSER
	BRANCH TAKE-OFF WITH ADJUSTABLE SPLITTER DAMPER IN SUPPLY DUCT
O.E.D.	OPEN ENDED DUCT WITH BALANCING DAMPER AND BELLMOUTH. DIRECTION AS SHOWN
	FLEXIBLE DUCT CONNECTION
	ACOUSTICALLY LINED DUCTWORK
SL	SILENCER (ATTENUATOR)
	FLEXIBLE DUCT (DOUBLE LINE)
	FLEXIBLE DUCT (SINGLE LINE)
	FLEXIBLE DUCT CONNECTION WITH BALANCING DAMPER ON TAKE-OFF
	DUCT MOUNTED HEATING COIL
	SUPPLY AIR TERMINAL BOX C/W REHEAT COIL AND ATTENUATOR.
	SUPPLY AIR TERMINAL BOX C/W ATTENUATOR.
	RETURN / EXHAUST AIR TERMINAL BOX ATTENUATOR.
	FIRE RATED DUCTWORK (DOUBLE LINE)
	DUCT TRANSITION FROM RECTANGULAR TO ROUND
	RECTANGULAR DUCT BREAK
	ROUND DUCT BREAK
	SINGLE LINE DUCT BREAK
U/C	3/4" DOOR UNDERCUT
	TRANSFER AIR DUCT
	SUPPLY AIR LIGHT TROFFER
U/C	3/4" DOOR UNDERCUT
TYPE, DIFFUSER SIZE (IN), NECK SIZE (IN), A-24x24-8Ø-100, AIRFLOW IN CFM	DIFFUSER TAG
TYPE, AIRFLOW IN CFM, A-100, A-WxH-100, AIRFLOW IN CFM, GRILLE SIZE	GRILLE TAG

THIS LEGEND IS GENERIC. ALL SYMBOLS LISTED MAY NOT BE APPLICABLE FOR THIS PROJECT. REFER TO FLOOR PLANS TO DETERMINE USED DEVICES AND EQUIPMENT.

NO.	DATE	ISSUED
04	2026/01/06	ISSUED FOR TENDER
03	2025/12/09	ISSUED FOR PERMIT
02	2025/10/15	ISSUED FOR 50% CD
01	2025/06/17	ISSUED FOR 100% DD

NOTES

CONTRACTOR MUST CHECK AND VERIFY ALL DIMENSIONS SHOWN ON DRAWINGS WITH SITE CONDITIONS, PRIOR TO THE WORK AND NOTIFY THE ARCHITECT OF DIFFERENCES. AWAIT CLARIFICATION BEFORE CONTINUING.

DO NOT SCALE DRAWINGS.

ALL DRAWINGS, SPECIFICATIONS AND RELATED DOCUMENTS ARE THE COPYRIGHT PROPERTY OF THE ARCHITECT AND MUST BE RETURNED UPON REQUEST. REPRODUCTION OF DRAWINGS, SPECIFICATIONS AND RELATED DOCUMENTS IN PART OR IN WHOLE IS FORBIDDEN WITHOUT THE ARCHITECT'S WRITTEN PERMISSION.

THESE DRAWINGS ARE FOR PERMIT PURPOSES ONLY. THEY INDICATE DESIGN INTENT ONLY AND DO NOT FULLY DESCRIBE OR SPECIFY ALL CONDITIONS, MATERIAL OR ASSEMBLIES. REQUEST FURTHER INFORMATION FROM ARCHITECT PRIOR TO COMMENCING CONSTRUCTION AS REQUIRED.

ARCHITECT:
CARTER AI
DAVID CARTER ARCHITECTS INC.
688 Richmond St W, Suite 303 Toronto ON M6J 1C5 | 416 977 6300

MECHANICAL AND ELECTRICAL ENGINEERING:
QUASAR
250 Rowntree Dairy Road Woodbridge, ON L4L 9J7

CLIENT:
COLLINGWOOD G&M HOSPITAL

NUCLEAR MEDICINE SPECT/CT CAMERA

COLLINGWOOD GENERAL AND MARINE HOSPITAL

459 HUME STREET, COLLINGWOOD ON

PROJECT NORTH

TRUE NORTH

KEY PLAN LENGENDS AND NOTES

ENTERED: TZ
CHECKED: MM
DATE: 2025/12/09
PROJECT NO. HC-24-173

DRAWING NO. M001

DEMOLITION NOTES:

1.	DEMOLISH EXISTING SANITARY DRAIN. PREPARE EXISTING FOR NEW LAYOUT. COORDINATE WITH GC
2.	CUT BACK EXISTING ABOVE GROUND SANITARY TO MAIN. CUT EXISTING VENT IN CEILING. PREPARE FOR NEW CONNECTION AS SHOWN ON NEW WORK DRAWINGS.

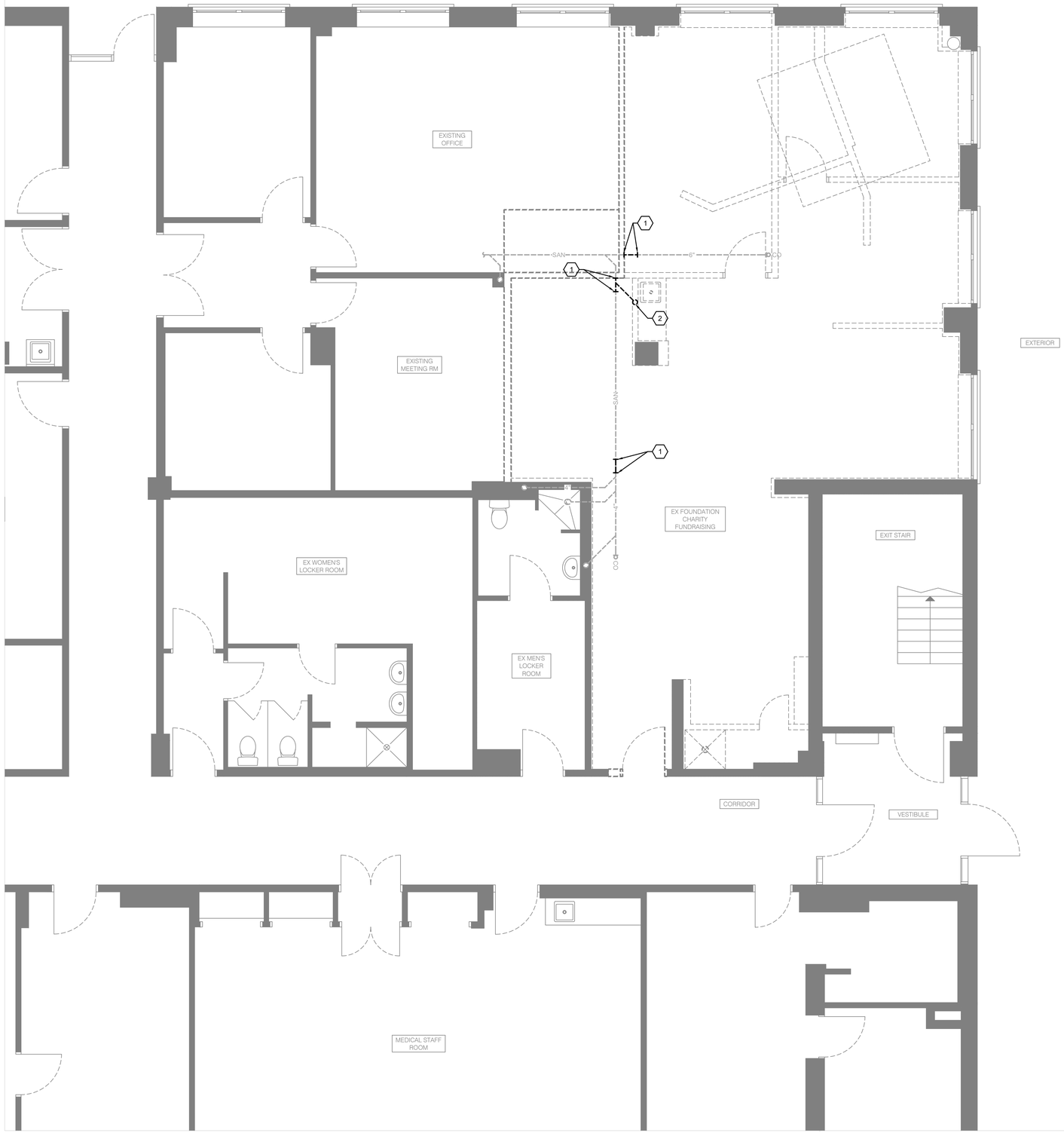

1 M200 MECHANICAL BELOW GRADE PLUMBING PLAN - DEMOLITION
SCALE: 1/4" = 1'-0"

NO.	DATE	ISSUED
04	2026/01/06	ISSUED FOR TENDER
03	2025/12/09	ISSUED FOR PERMIT
02	2025/10/15	ISSUED FOR 50% CD
01	2025/06/17	ISSUED FOR 100% DD

NOTES

CONTRACTOR MUST CHECK AND VERIFY ALL DIMENSIONS SHOWN ON DRAWINGS WITH SITE CONDITIONS, PRIOR TO THE WORK AND NOTIFY THE ARCHITECT OF DIFFERENCES. AWAIT CLARIFICATION BEFORE CONTINUING.

DO NOT SCALE DRAWINGS.

ALL DRAWINGS, SPECIFICATIONS AND RELATED DOCUMENTS ARE THE COPYRIGHT PROPERTY OF THE ARCHITECT AND MUST BE RETURNED UPON REQUEST. REPRODUCTION OF DRAWINGS, SPECIFICATIONS AND RELATED DOCUMENTS IN PART OR IN WHOLE IS FORBIDDEN WITHOUT THE ARCHITECT'S WRITTEN PERMISSION.

THESE DRAWINGS ARE FOR PERMIT PURPOSES ONLY. THEY INDICATE DESIGN INTENT ONLY AND DO NOT FULLY DESCRIBE OR SPECIFY ALL CONDITIONS, MATERIAL OR ASSEMBLIES. REQUEST FURTHER INFORMATION FROM ARCHITECT PRIOR TO COMMENCING CONSTRUCTION AS REQUIRED.

ARCHITECT:
CARTER AI
DAVID CARTER ARCHITECTS INC.
688 Richmond St W, Suite 303 Toronto ON M6J 1C5 | 416 977 6300

MECHANICAL AND ELECTRICAL ENGINEERING:
QUASAR
250 Rowntree Dairy Road Woodbridge, ON L4L 9J7

CLIENT:
COLLINGWOOD G&M HOSPITAL

NUCLEAR MEDICINE SPECT/CT CAMERA

COLLINGWOOD GENERAL AND MARINE HOSPITAL

459 HUME STREET, COLLINGWOOD ON

PROJECT NORTH

TRUE NORTH

MECHANICAL BELOW GRADE PLUMBING PLAN - DEMOLITION

ENTERED: TZ
CHECKED: MM
DATE: 2025/12/09
PROJECT NO. HC-24-173

DRAWING NO. M200

DEMOLITION NOTES:

1.	DEMOLISH EXISTING PIPING. PREPARE EXISTING FOR NEW LAYOUT
2.	CUT EXISTING VENT IN CEILING SPACE WHERE INDICATED PREPARE FOR NEW CONNECTION.
3.	DEMOLISH EXISTING SANITARY PIPING.
4.	DEMOLISH EXISTING HYDRONIC HEATER AND CUT BACK PIPING TO WHERE INDICATED

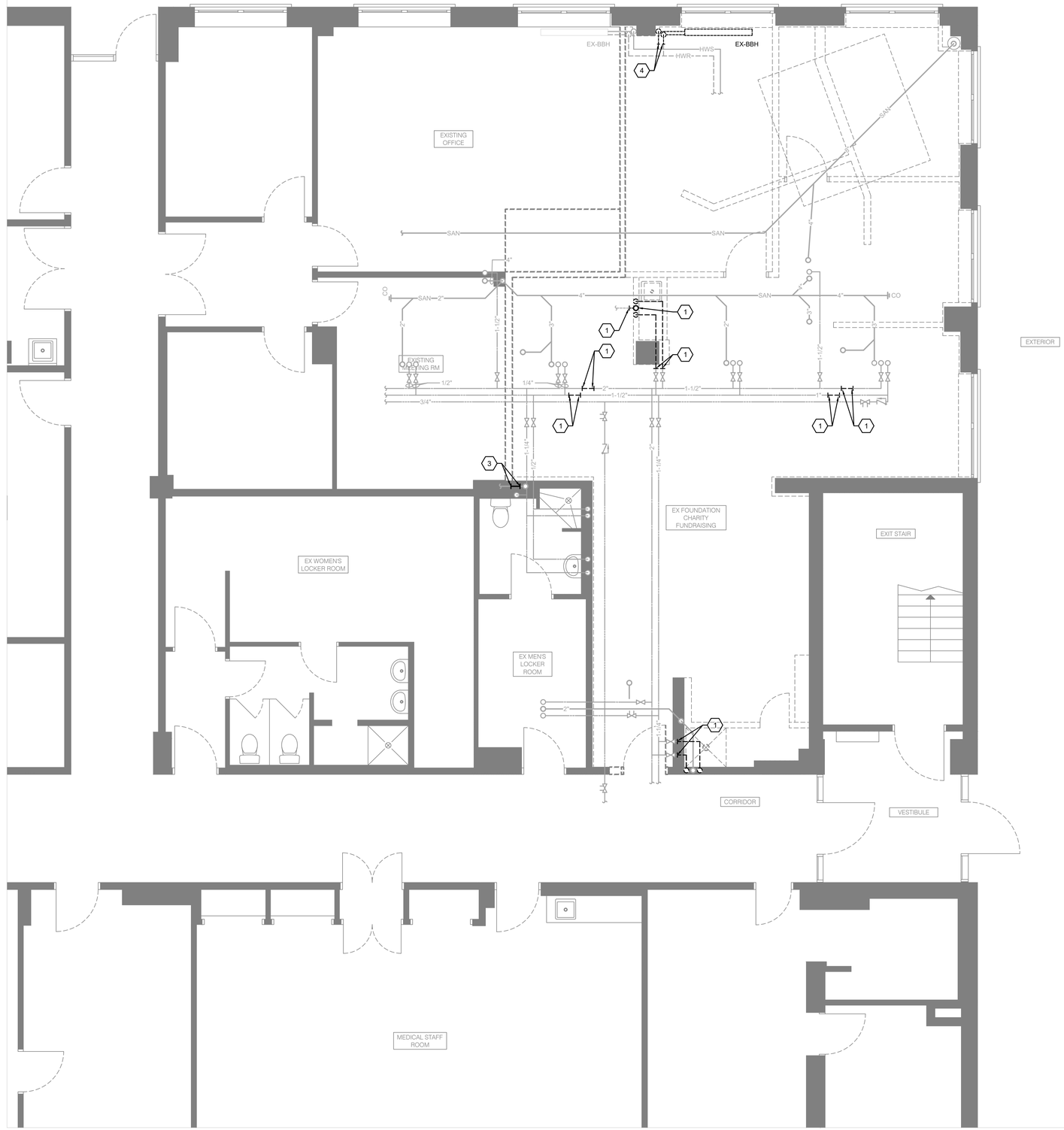

1 M201 MECHANICAL PLUMBING PLAN - DEMOLITION
SCALE: 1/4" = 1'-0"

NO.	DATE	ISSUED
04	2026/01/06	ISSUED FOR TENDER
03	2025/12/09	ISSUED FOR PERMIT
02	2025/10/15	ISSUED FOR 50% CD
01	2025/06/17	ISSUED FOR 100% DD

NOTES

CONTRACTOR MUST CHECK AND VERIFY ALL DIMENSIONS SHOWN ON DRAWINGS WITH SITE CONDITIONS, PRIOR TO THE WORK AND NOTIFY THE ARCHITECT OF DIFFERENCES. AWAIT CLARIFICATION BEFORE CONTINUING.

DO NOT SCALE DRAWINGS.

ALL DRAWINGS, SPECIFICATIONS AND RELATED DOCUMENTS ARE THE COPYRIGHT PROPERTY OF THE ARCHITECT AND MUST BE RETURNED UPON REQUEST. REPRODUCTION OF DRAWINGS, SPECIFICATIONS AND RELATED DOCUMENTS IN PART OR IN WHOLE IS FORBIDDEN WITHOUT THE ARCHITECT'S WRITTEN PERMISSION.

THESE DRAWINGS ARE FOR PERMIT PURPOSES ONLY. THEY INDICATE DESIGN INTENT ONLY AND DO NOT FULLY DESCRIBE OR SPECIFY ALL CONDITIONS, MATERIAL OR ASSEMBLIES. REQUEST FURTHER INFORMATION FROM ARCHITECT PRIOR TO COMMENCING CONSTRUCTION AS REQUIRED.

ARCHITECT:
CARTER AI
DAVID CARTER ARCHITECTS INC.
688 Richmond St W, Suite 303 Toronto ON M6J 1C5 | 416 977 6300

MECHANICAL AND ELECTRICAL ENGINEERING:
QUASAR
250 Rowntree Dairy Road Woodbridge, ON L4L 9J7

CLIENT:
COLLINGWOOD G&M HOSPITAL

NUCLEAR MEDICINE SPECT/CT CAMERA
COLLINGWOOD GENERAL AND MARINE HOSPITAL
459 HUME STREET, COLLINGWOOD ON

PROJECT NORTH
TRUE NORTH

MECHANICAL PLUMBING PLAN - DEMOLITION

ENTERED: TZ
CHECKED: MM
DATE: 2025/12/09
PROJECT NO. HC-24-173

DRAWING NO. M201

NEW WORK NOTES:

1.	DEMOLISH EXISTING PIPING. PREPARE EXISTING FOR NEW LAYOUT
2.	CUT EXISTING VENT IN CEILING SPACE WHERE INDICATED PREPARE FOR NEW CONNECTION.
3.	CONNECT NEW IPAC AND LAV TO EXISTING VENT
4.	BEFORE EACH P-TRAP CONNECT FIXTURE TO ELECTRONIC TP STATION

1 M202 MECHANICAL BELOW GRADE PLUMBING PLAN - NEW WORK
SCALE: 1/4" = 1'-0"

NO.	DATE	ISSUED
04	2026/01/06	ISSUED FOR TENDER
03	2025/12/09	ISSUED FOR PERMIT
02	2025/10/15	ISSUED FOR 50% CD
01	2025/06/17	ISSUED FOR 100% DD

NOTES

CONTRACTOR MUST CHECK AND VERIFY ALL DIMENSIONS SHOWN ON DRAWINGS WITH SITE CONDITIONS, PRIOR TO THE WORK AND NOTIFY THE ARCHITECT OF DIFFERENCES. AWAIT CLARIFICATION BEFORE CONTINUING.

DO NOT SCALE DRAWINGS.

ALL DRAWINGS, SPECIFICATIONS AND RELATED DOCUMENTS ARE THE COPYRIGHT PROPERTY OF THE ARCHITECT AND MUST BE RETURNED UPON REQUEST. REPRODUCTION OF DRAWINGS, SPECIFICATIONS AND RELATED DOCUMENTS IN PART OR IN WHOLE IS FORBIDDEN WITHOUT THE ARCHITECT'S WRITTEN PERMISSION.

THESE DRAWINGS ARE FOR PERMIT PURPOSES ONLY. THEY INDICATE DESIGN INTENT ONLY AND DO NOT FULLY DESCRIBE OR SPECIFY ALL CONDITIONS, MATERIAL OR ASSEMBLIES. REQUEST FURTHER INFORMATION FROM ARCHITECT PRIOR TO COMMENCING CONSTRUCTION AS REQUIRED.

ARCHITECT:
CARTER AI
DAVID CARTER ARCHITECTS INC.
688 Richmond St W, Suite 303 Toronto ON M6J 1C5 | 416 977 6300

MECHANICAL AND ELECTRICAL ENGINEERING:
QUASAR
250 Rowntree Dairy Road Woodbridge, ON L4L 9J7

CLIENT:
COLLINGWOOD G&M HOSPITAL

NUCLEAR MEDICINE SPECT/CT CAMERA

COLLINGWOOD GENERAL AND MARINE HOSPITAL

459 HUME STREET, COLLINGWOOD ON

PROJECT NORTH
TRUE NORTH

MECHANICAL BELOW GRADE PLUMBING PLAN - NEW WORK

ENTERED: TZ
CHECKED: MM
DATE: 2025/12/09
PROJECT NO. HC-24-173

DRAWING NO. M202

NEW WORK NOTES:

1.	NOT USED.
2.	CUT EXISTING VENT IN CEILING SPACE WHERE INDICATED PREPARE FOR NEW CONNECTION.
3.	CONNECT NEW IPAC AND LAV TO EXISTING VENT
4.	BEFORE EACH P-TRAP CONNECT FIXTURE TO ELECTRONIC TP STATION
5.	PROVIDE NEW MEDICAL GAS PIPING C/W ISOLATION VALVE DOWN TO NEW ZONE CONTROL VALVE WITH ALARM PANEL.
6.	CONNECT NEW 1/2" OXYGEN AND 3/4" MEDICAL VACUUM LINES TO EXISTING AT THIS LOCATION. CONTRACTOR TO CONFIRM EXACT LOCATION ON SITE. MODIFY AND EXTEND EXISTING PIPING AS REQUIRED TO MAKE FULL CONNECTION.
7.	NEW 1/2" OXYGEN AND 3/4" MEDICAL VACUUM LINES DOWN IN WALL TO NEW MEDICAL GAS OUTLETS.
8.	CUT EXISTING HYDRAULIC PIPES WERE INDICATED AND PERMANENTLY CAP.

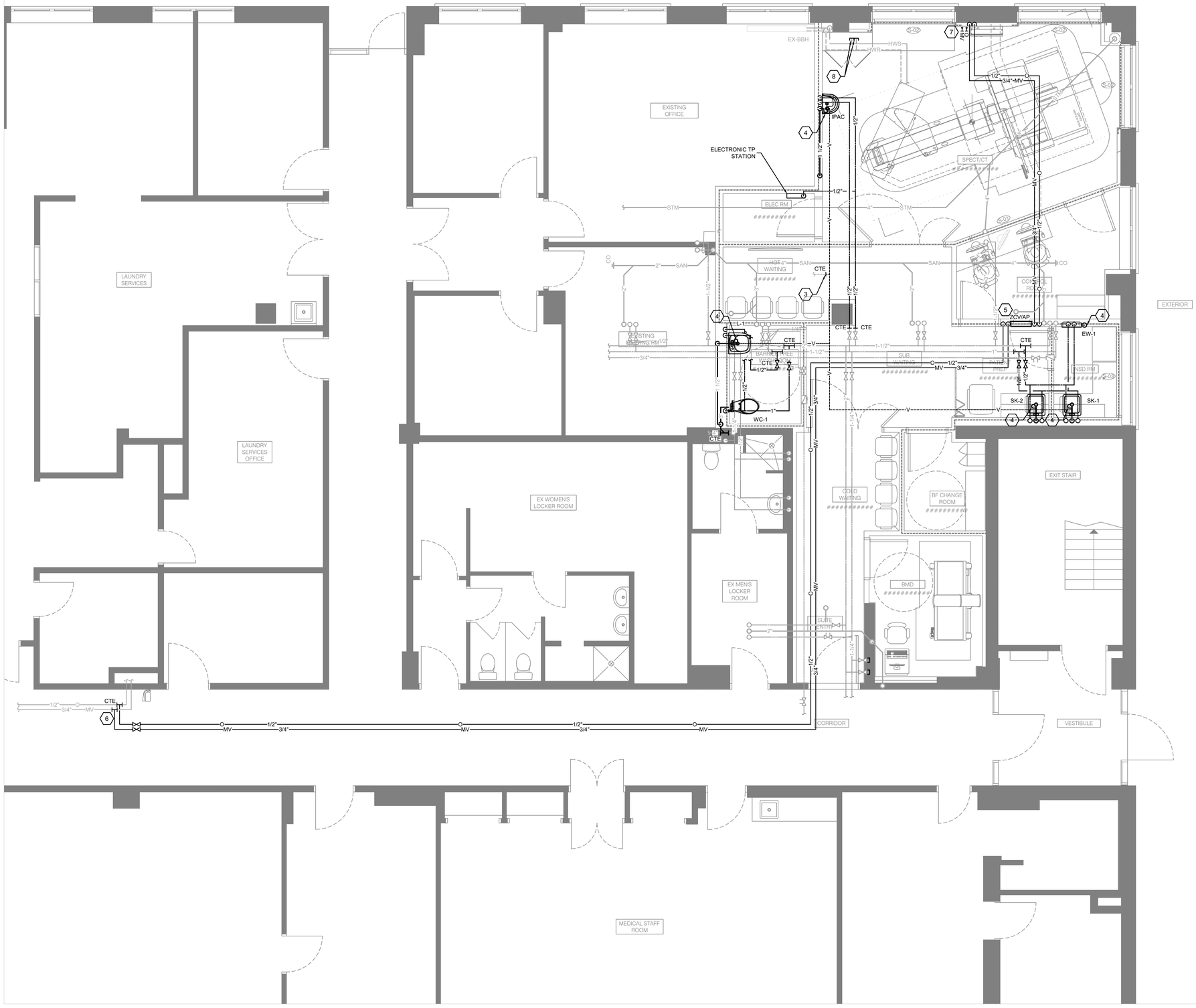

1 M203 MECHANICAL PLUMBING PLAN - NEW WORK
SCALE: 1/4" = 1'-0"

NO.	DATE	ISSUED
04	2026/01/06	ISSUED FOR TENDER
03	2025/12/09	ISSUED FOR PERMIT
02	2025/10/15	ISSUED FOR 50% CD
01	2025/06/17	ISSUED FOR 100% DD

NOTES

CONTRACTOR MUST CHECK AND VERIFY ALL DIMENSIONS SHOWN ON DRAWINGS WITH SITE CONDITIONS, PRIOR TO THE WORK AND NOTIFY THE ARCHITECT OF DIFFERENCES. AWAIT CLARIFICATION BEFORE CONTINUING.

DO NOT SCALE DRAWINGS.

ALL DRAWINGS, SPECIFICATIONS AND RELATED DOCUMENTS ARE THE COPYRIGHT PROPERTY OF THE ARCHITECT AND MUST BE RETURNED UPON REQUEST. REPRODUCTION OF DRAWINGS, SPECIFICATIONS AND RELATED DOCUMENTS IN PART OR IN WHOLE IS FORBIDDEN WITHOUT THE ARCHITECT'S WRITTEN PERMISSION.

THESE DRAWINGS ARE FOR PERMIT PURPOSES ONLY. THEY INDICATE DESIGN INTENT ONLY AND DO NOT FULLY DESCRIBE OR SPECIFY ALL CONDITIONS, MATERIAL OR ASSEMBLIES. REQUEST FURTHER INFORMATION FROM ARCHITECT PRIOR TO COMMENCING CONSTRUCTION AS REQUIRED.

ARCHITECT:
CARTER AI
DAVID CARTER ARCHITECTS INC.
688 Richmond St W, Suite 303 Toronto ON M6J 1C5 | 416 977 6300

MECHANICAL AND ELECTRICAL ENGINEERING:
QUASAR
250 Rowntree Dairy Road Woodbridge, ON L4L 9J7

CLIENT:
COLLINGWOOD G&M HOSPITAL

NUCLEAR MEDICINE SPECT/CT CAMERA

COLLINGWOOD GENERAL AND MARINE HOSPITAL

459 HUME STREET, COLLINGWOOD ON

PROJECT NORTH
TRUE NORTH

MECHANICAL PLUMBING PLAN - NEW WORK

ENTERED: TZ	DRAWING NO.
CHECKED: MM	M203
DATE: 2025/12/09	
PROJECT NO. HC-24-173	

DEMOLITION NOTES:

1.	DEMOLISH EXISTING DUCTWORK.
2.	DEMOLISH EXISTING RADIANT CEILING PANELS. REMOVE PIPING BACK TO BRANCH. ENSURE TERMINAL UNITS ON SECOND LEVEL REMAIN OPERATIONAL ONCE PIPING IS CAPPED. REMOVE PNEUMATIC CONTROLS THAT ARE NO LONGER REQUIRED.
3.	CAP EXISTING DUCT WHERE INDICATED.
4.	RE-BALANCE EXISTING DIFFUSER IN ROOM TO A NEW VALUE OF 360 CFM. UPDATE REHEAT COIL (TR6) SERVING ROOM B55 TO A MAXIMUM AIRFLOW OF 360CFM IN BAS SYSTEM.
5.	REMOVE EXISTING REHEAT COIL. PREPARE PIPING CONNECTIONS FOR NEW REHEAT COIL. MAINTAIN EXISTING THERMOSTAT AND CONTROLS.
6	REMOVE, CLEAN AND TEST EXISTING CONSTANT REHEAT BOX (TR2) FOR REINSTALLATION AS SHOWN ON NEW WORK DRAWINGS.
7.	REMOVE, CLEAN AND TEST EXISTING CONSTANT REHEAT BOX (TR6) FOR REINSTALLATION AS SHOWN ON NEW WORK DRAWINGS.
8.	DEMOLISH EXISTING PENDENT SPRINKLER HEAD. PREPARE AND MODIFY EXISTING PIPING FOR NEW WORK.

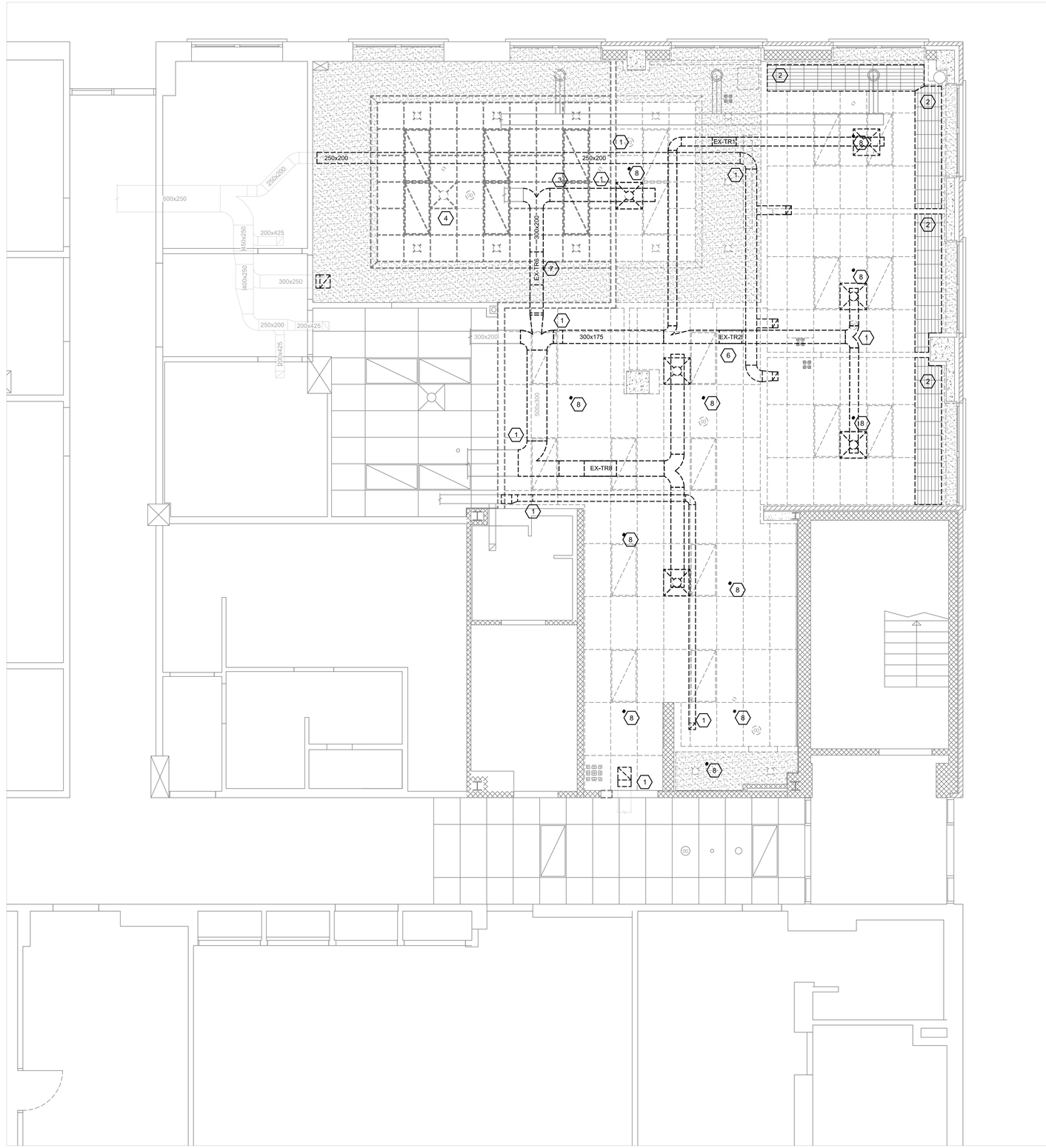

1 M300 MECHANICAL HVAC & FIRE PROTECTION PLAN - DEMOLITION
SCALE: 1/4" = 1'-0"

NO.	DATE	ISSUED
04	2026/01/06	ISSUED FOR TENDER
03	2025/12/09	ISSUED FOR PERMIT
02	2025/10/15	ISSUED FOR 50% CD
01	2025/06/17	ISSUED FOR 100% DD

NOTES

CONTRACTOR MUST CHECK AND VERIFY ALL DIMENSIONS SHOWN ON DRAWINGS WITH SITE CONDITIONS, PRIOR TO THE WORK AND NOTIFY THE ARCHITECT OF DIFFERENCES. AWAIT CLARIFICATION BEFORE CONTINUING.

DO NOT SCALE DRAWINGS.

ALL DRAWINGS, SPECIFICATIONS AND RELATED DOCUMENTS ARE THE COPYRIGHT PROPERTY OF THE ARCHITECT AND MUST BE RETURNED UPON REQUEST. REPRODUCTION OF DRAWINGS, SPECIFICATIONS AND RELATED DOCUMENTS IN PART OR IN WHOLE IS FORBIDDEN WITHOUT THE ARCHITECT'S WRITTEN PERMISSION.

THESE DRAWINGS ARE FOR PERMIT PURPOSES ONLY. THEY INDICATE DESIGN INTENT ONLY AND DO NOT FULLY DESCRIBE OR SPECIFY ALL CONDITIONS, MATERIAL OR ASSEMBLIES. REQUEST FURTHER INFORMATION FROM ARCHITECT PRIOR TO COMMENCING CONSTRUCTION AS REQUIRED.

ARCHITECT:
CARTER AI
DAVID CARTER ARCHITECTS INC.
688 Richmond St W, Suite 303 Toronto ON M6J 1C5 | 416 977 6300

MECHANICAL AND ELECTRICAL ENGINEERING:
QUASAR
250 Rowntree Dairy Road Woodbridge, ON L4L 9J7

CLIENT:
COLLINGWOOD G&M HOSPITAL

NUCLEAR MEDICINE SPECT/CT CAMERA
COLLINGWOOD GENERAL AND MARINE HOSPITAL
459 HUME STREET, COLLINGWOOD ON

PROJECT NORTH
TRUE NORTH

MECHANICAL HVAC & FIRE PROTECTION PLAN - DEMOLITION

ENTERED: TZ
CHECKED: MM
DATE: 2025/12/09
PROJECT NO.
HC-24-173

DRAWING NO.
M300

NEW WORK NOTES:

1. INSTALL NEW EVAPORATOR 'ME-1A' AND 'ME-1C'. CONTRACTOR TO INSTALL AS PER MANUFACTURER'S RECOMMENDED METHOD.
2. PROVIDE CUSTOM FILTER BOX ACCESSIBLE IN CEILING SPACE TO REPLACE FILTERS. PROVIDE CAMFIL 'DURAFIL ES2' 16"x25" - 12" THICK MERV 14 FILTERS (0,31 Pa MAX PRESSURE DROP) C/W FILTER BOX. ENSURE ACCESS FOR FILTER CHANGES IN CEILING SPACE. COORDINATE WITH EXISTING SERVICES ON SITE. FILTER BOX. BASES OF DESIGN : CAMFIL GLIDEPACK MULTITRACK HOUSING
3. PROVIDE CUSTOM FILTER BOX ACCESSIBLE IN CEILING SPACE TO REPLACE FILTERS. PROVIDE CAMFIL 'FARR 30/30' 16"x25" - 2" MERV 8 FILTERS (0,31 Pa MAX PRESSURE DROP) C/W FILTER BOX. ENSURE ACCESS FOR FILTER CHANGES IN CEILING SPACE. COORDINATE WITH EXISTING SERVICES ON SITE. FILTER BOX. BASES OF DESIGN : CAMFIL GLIDEPACK MULTITRACK HOUSING
4. RELOCATE EXISTING CAV COMPLETE WITH DUCT MOUNTED REHEAT COIL. EXTEND NEW HEATING WATER PIPING TO BOOSTER COIL LOCATION, AS INDICATED. CONTRACTOR TO INCLUDE FOR PIPE FREEZING OR HOT TAPPING FOR CONNECTION TO EXISTING HEATING WATER PIPING, AS REQUIRED
5. CAP AND SEAL EXISTING DUCT WHERE INDICATED.
6. CONTRACTOR TO SCAN EXISTING WALL AREA AND COORDINATE WITH STRUCTURAL ON THE LOCATION AND ARRANGEMENT OF OPENINGS TO FACILITATE EXHAUST AIR (MINIMUM THREE (3) 8INCH CORES). EXHAUST FAN SELECTION MAY NEED TO BE REVISED BASED ON ARRANGEMENT SCAN RESULTS. CONTRACTOR TO SUBMIT EXHAUST FAN SHOP DRAWINGS ONCE SCANS ARE COMPLETE AND REVIEWED BY STRUCTURAL AND MECHANICAL CONSULTANTS.
7. EXHAUST LOUVER 350mmx350mm, MIN 50% FREE AREA STAINLESS STEEL LOUVER. REFER TO ARCHITECTURAL ELEVATIONS AND MECHANICAL SPECIFICATIONS.
8. INSTALL NEW CONCEALED QUICK ACTION SPRINKLER HEAD. CONNECT TO EXISTING SPRINKLER PIPING. MODIFY AND EXTEND EXISTING PIPING AND REQUIRED TO MAKE FULL CONNECTION. COORDINATE WITH ARCHITECTURAL RCP, ELECTRICAL DRAWINGS AND OTHER SERVICES.
9. SUPPLY AND INSTALL AT HIGH LEVEL ON BULKHEAD FACING EXTERIOR GLASS QTY (1) SUPPLY AND QTY (1). SUPPLY / RETURN MINI AIRVALVE DIFFUSER: UNIVERSAL VALVE DIFFUSER BY AIRVECTOR "DRV 04" (4in). CONNECT BACK TO MAIN DUCTS USING A SINGLE PIECE OF 4" FLEX DUCT. BALANCE EACH SUPPLY AND RETURN MINI AIR VALVE TO 30CFM PRIOR TO INSTALLATION. (REFER TO ARCHITECTURAL DETAIL / SECTION FOR ADDITIONAL INFORMATION AND PLACEMENT)

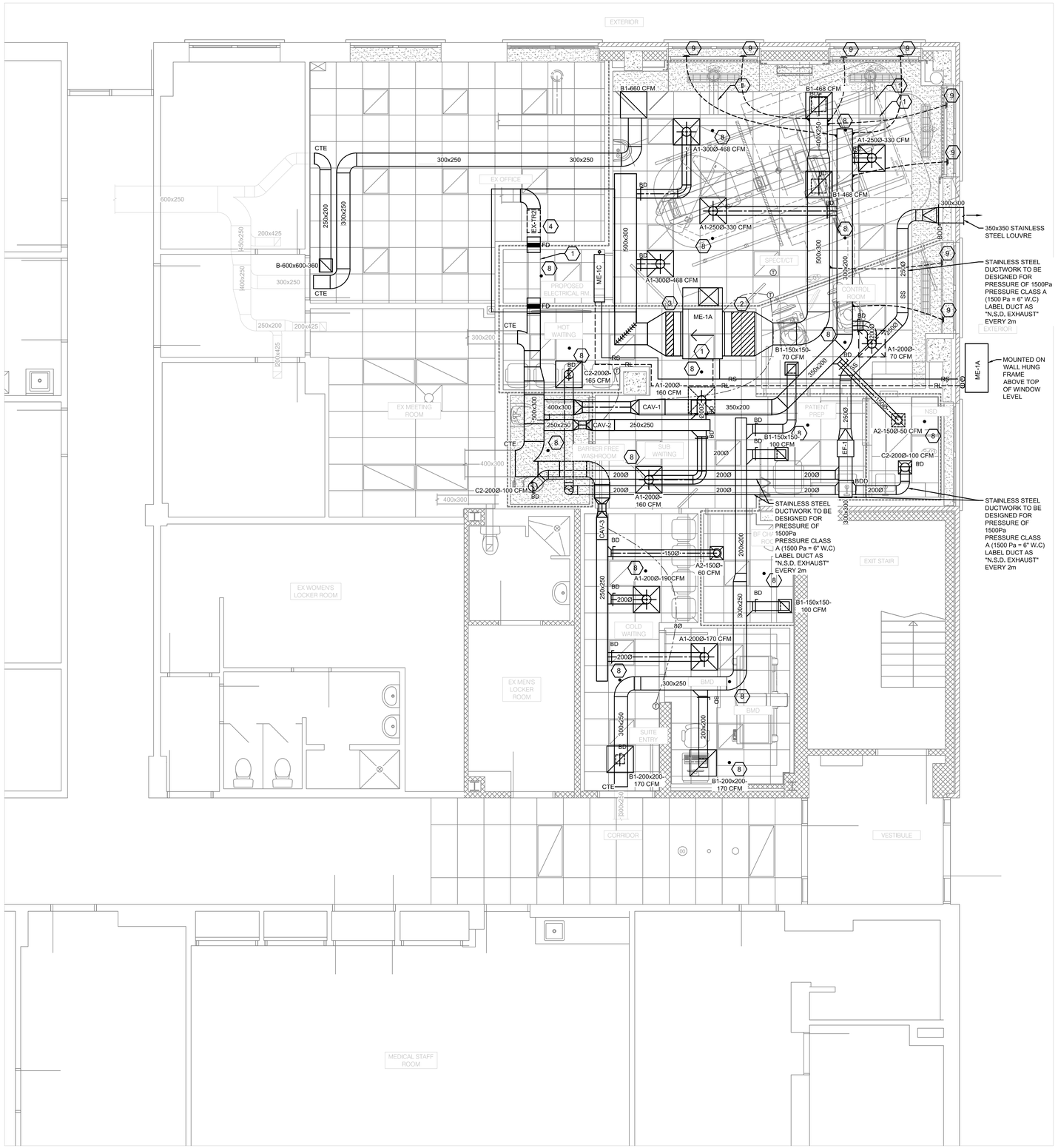

1 M301 MECHANICAL HVAC & FIRE PROTECTION - NEW WORK
SCALE: 1/4" = 1'-0"

NO.	DATE	ISSUED
04	2026/01/06	ISSUED FOR TENDER
03	2025/12/09	ISSUED FOR PERMIT
02	2025/10/15	ISSUED FOR 50% CD
01	2025/06/17	ISSUED FOR 100% DD

NOTES

CONTRACTOR MUST CHECK AND VERIFY ALL DIMENSIONS SHOWN ON DRAWINGS WITH SITE CONDITIONS, PRIOR TO THE WORK AND NOTIFY THE ARCHITECT OF DIFFERENCES. AWAIT CLARIFICATION BEFORE CONTINUING.

DO NOT SCALE DRAWINGS.

ALL DRAWINGS, SPECIFICATIONS AND RELATED DOCUMENTS ARE THE COPYRIGHT PROPERTY OF THE ARCHITECT AND MUST BE RETURNED UPON REQUEST. REPRODUCTION OF DRAWINGS, SPECIFICATIONS AND RELATED DOCUMENTS IN PART OR IN WHOLE IS FORBIDDEN WITHOUT THE ARCHITECT'S WRITTEN PERMISSION.

THESE DRAWINGS ARE FOR PERMIT PURPOSES ONLY. THEY INDICATE DESIGN INTENT ONLY AND DO NOT FULLY DESCRIBE OR SPECIFY ALL CONDITIONS, MATERIAL OR ASSEMBLIES. REQUEST FURTHER INFORMATION FROM ARCHITECT PRIOR TO COMMENCING CONSTRUCTION AS REQUIRED.

ARCHITECT:
CARTER AI
DAVID CARTER ARCHITECTS INC.
688 Richmond St W, Suite 303 Toronto ON M6J 1C5 | 416 977 6300

MECHANICAL AND ELECTRICAL ENGINEERING:
QUASAR
250 Rowntree Dairy Road Woodbridge, ON L4L 9J7

CLIENT:
COLLINGWOOD G&M HOSPITAL

NUCLEAR MEDICINE SPECT/CT CAMERA
COLLINGWOOD GENERAL AND MARINE HOSPITAL
459 HUME STREET, COLLINGWOOD ON

PROJECT NORTH
TRUE NORTH

MECHANICAL HVAC & FIRE PROTECTION - NEW WORK

ENTERED: TZ
CHECKED: MM
DATE: 2025/12/09
PROJECT NO. HC-24-173

DRAWING NO. M301

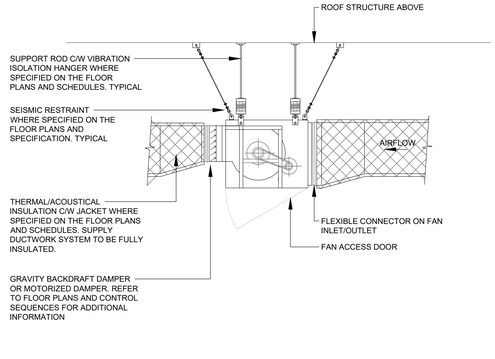

9 23 34 00.10 CENTRIFUGAL INLINE FAN
SCALE: N.T.S

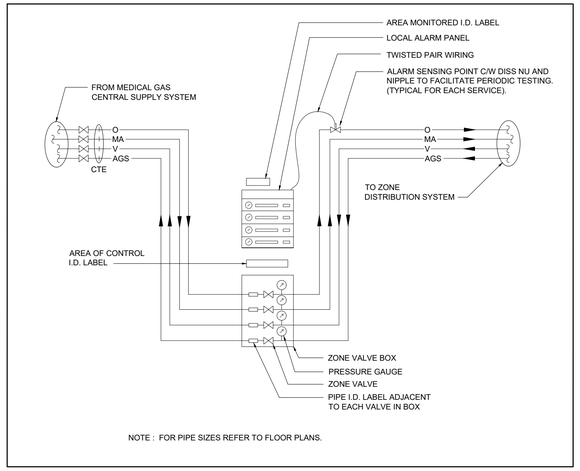

NOTE : FOR PIPE SIZES REFER TO FLOOR PLANS.

8 MED GAS ALARM PANEL/ZONE VALVE FLOW DIAGRAM
SCALE: N.T.S

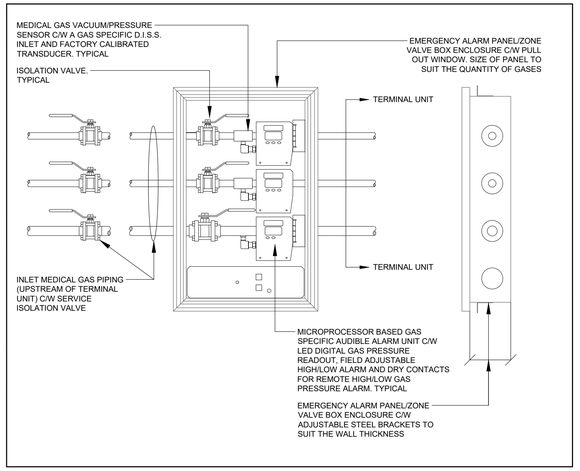

7 MEDICAL GAS ALARM PANEL/ZONE VALVE BOX DETAIL
SCALE: N.T.S

23 75 00.09

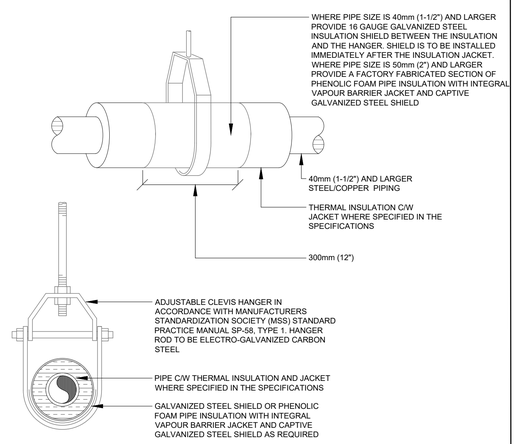

6 PIPING HANGERS AND SUPPORTS
SCALE: N.T.S.

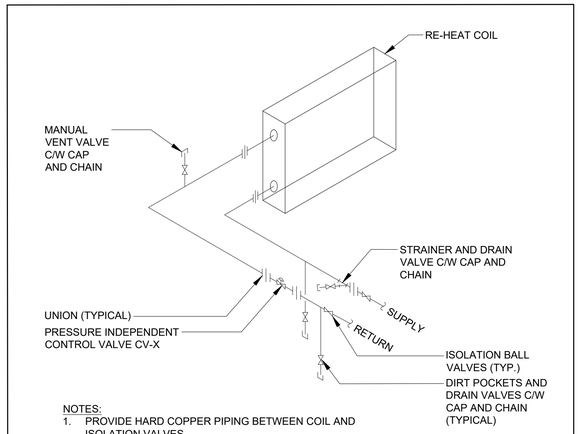

NOTES:
1. PROVIDE HARD COPPER PIPING BETWEEN COIL AND ISOLATION VALVES.
2. CLEAR STRAINER ONCE PIPING IS FILLED AND ACTIVELY FLOWING FOR 24hrs.
3. PROVIDE PIPE SUPPORTS.

5 BOOSTER COIL VALVING DETAIL
SCALE: N.T.S

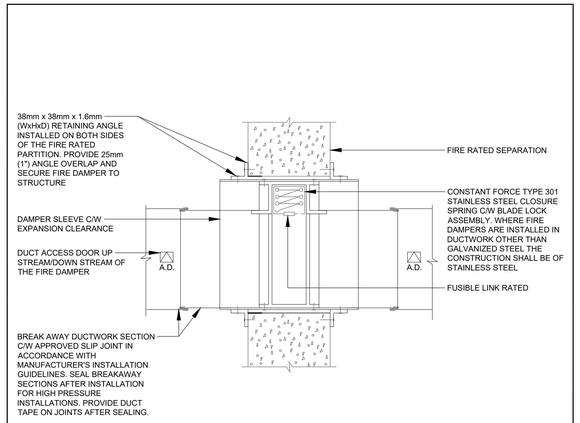

4 FUSIBLE LINK DAMPER DETAIL
SCALE: N.T.S

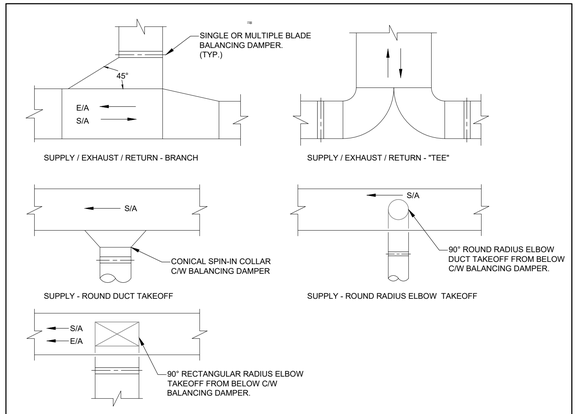

NOTES:
1. BALANCING DAMPERS SHALL BE PER SMACNA STANDARDS AND PROVIDED WITH LOCKING DEVICES.
2. REFER TO SPECIFICATIONS FOR ADDITIONAL REQUIREMENTS.
3. PROVIDE TURNING VANES WHERE SHOWN ON THE DRAWINGS.

3 DETAIL OF DUCTWORK FITTINGS AND TAKEOFFS
SCALE: N.T.S

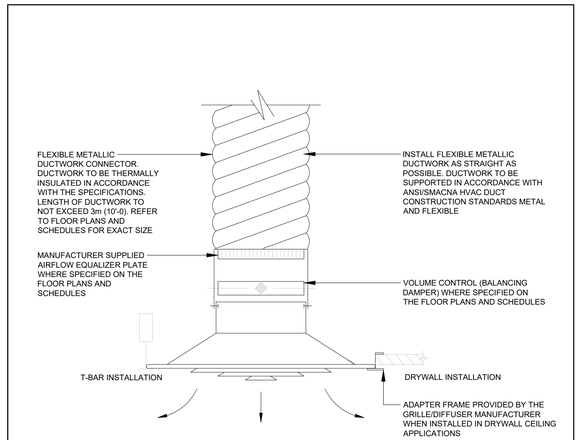

2 CEILING MOUNTED SUPPLY DIFFUSER DETAIL
SCALE: N.T.S

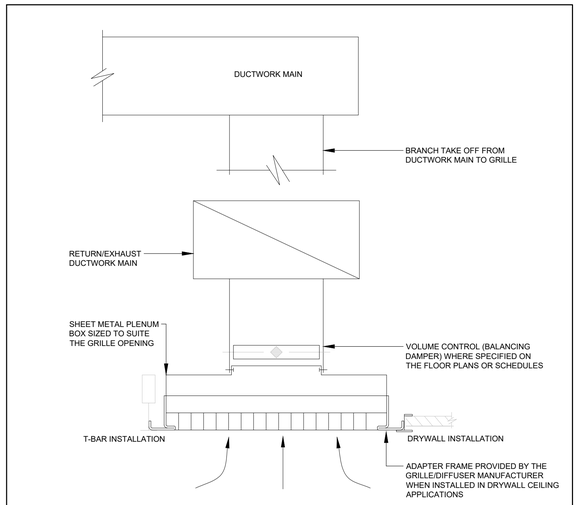

1 CEILING MOUNTED GRILLE DETAIL
SCALE: N.T.S

NO.	DATE	ISSUED
04	2026/01/06	ISSUED FOR TENDER
03	2025/12/09	ISSUED FOR PERMIT
02	2025/10/15	ISSUED FOR 50% CD
01	2025/06/17	ISSUED FOR 100% DD

NOTES

CONTRACTOR MUST CHECK AND VERIFY ALL DIMENSIONS SHOWN ON DRAWINGS WITH SITE CONDITIONS, PRIOR TO THE WORK AND NOTIFY THE ARCHITECT OF DIFFERENCES. AWAIT CLARIFICATION BEFORE CONTINUING.

DO NOT SCALE DRAWINGS.

ALL DRAWINGS, SPECIFICATIONS AND RELATED DOCUMENTS ARE THE COPYRIGHT PROPERTY OF THE ARCHITECT AND MUST BE RETURNED UPON REQUEST. REPRODUCTION OF DRAWINGS, SPECIFICATIONS AND RELATED DOCUMENTS IN PART OR IN WHOLE IS FORBIDDEN WITHOUT THE ARCHITECT'S WRITTEN PERMISSION.

THESE DRAWINGS ARE FOR PERMIT PURPOSES ONLY. THEY INDICATE DESIGN INTENT ONLY AND DO NOT FULLY DESCRIBE OR SPECIFY ALL CONDITIONS, MATERIAL OR ASSEMBLIES. REQUEST FURTHER INFORMATION FROM ARCHITECT PRIOR TO COMMENCING CONSTRUCTION AS REQUIRED.

ARCHITECT:
CARTER AI
DAVID CARTER ARCHITECTS INC.
688 Richmond St W, Suite 303 Toronto ON M6J 1C5 | 416 977 6300

MECHANICAL AND ELECTRICAL ENGINEERING:
QUASAR
250 Rowntree Dairy Road Woodbridge, ON L4L 9J7

CLIENT:
COLLINGWOOD G&M HOSPITAL

NUCLEAR MEDICINE
SPECT/CT CAMERA
COLLINGWOOD GENERAL AND MARINE HOSPITAL
459 HUME STREET, COLLINGWOOD ON

PROJECT NORTH
TRUE NORTH

MECHANICAL DETAILS
1 OF 2

ENTERED: TZ
CHECKED: MM
DATE: 2025/12/09
PROJECT NO.
HC-24-173

DRAWING NO.
M400

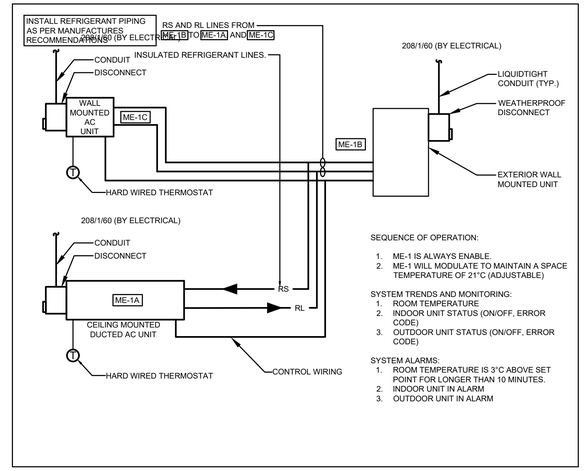

7 DX COOLING INSTALLATION SCHEMATIC
SCALE: N.T.S

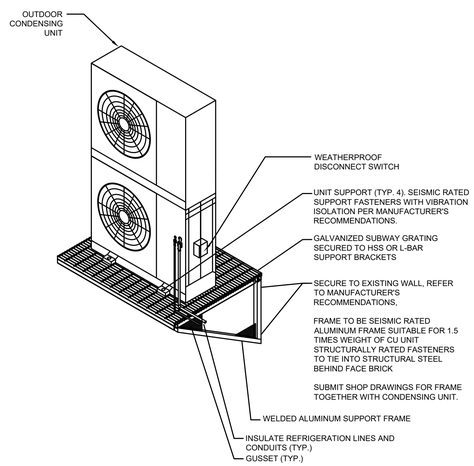

6 CONDENSATE DRAIN AIR GAP AND CONNECTION DETAIL
SCALE: N.T.S

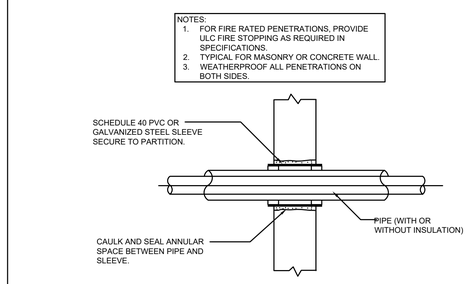

5 PIPE PENETRATING THRU FLOOR/WALL DETAIL
SCALE: N.T.S

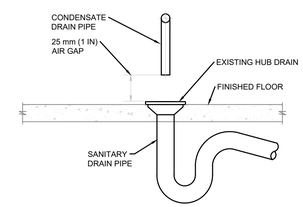

4 CONDENSATE DRAIN AIR GAP AND CONNECTION DETAIL
SCALE: N.T.S

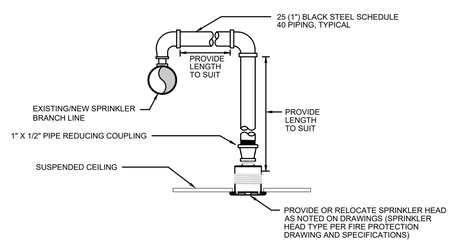

NOTES:
1. ADJUST SPRINKLER DROPS AS NECESSARY TO CLEAR OBSTRUCTIONS SUCH AS CEILING "T" BAR SUSPENSION SYSTEM, LIGHT FIXTURES, ETC. PROVIDE PIPE HANGER IF HORIZONTAL OFFSET LENGTH EXCEEDS 600mm (24 INCHES).
2. PIPING AND SPRINKLER HEAD TO BE MRI COMPATIBLE FOR MRI APPLICATIONS (NON-FERROUS)

3 TYPICAL NEW SPRINKLER HEAD DROP
SCALE: N.T.S

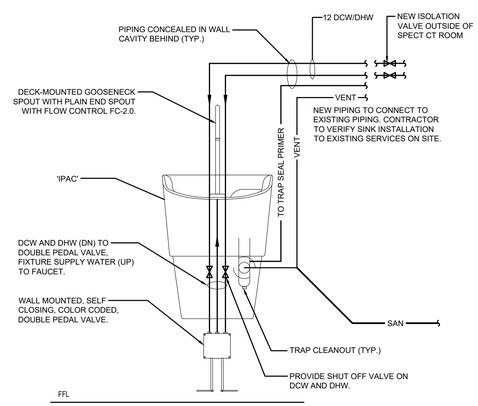

2 HAND HYGIENE SINK (IPAC) INSTALL DETAIL
SCALE: N.T.S

REQUIRED CLEARANCES FOR REDUCED PRESSURE ZONE ASSEMBLY					
CENTRELINE HEIGHT ABOVE FLOOR		MINIMUM CLEARANCE (mm)			
MINIMUM (mm)	MAXIMUM (mm)	RELIEF VALVE TO FLOOR	ABOVE DEVICE	IN FRONT	BEHIND
750	1500	300	300	750	20

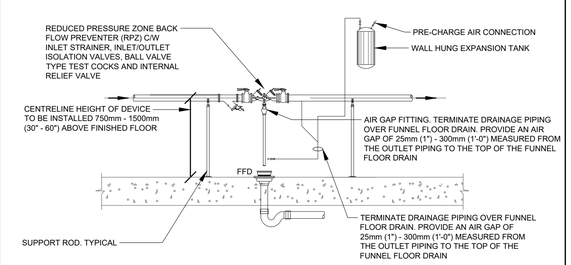

1 REDUCED PRESSURE ZONE ASSEMBLY & EXPANSION TANK
SCALE: N.T.S

NO.	DATE	ISSUED
04	2026/01/06	ISSUED FOR TENDER
03	2025/12/09	ISSUED FOR PERMIT
02	2025/10/15	ISSUED FOR 50% CD
01	2025/06/17	ISSUED FOR 100% DD

NOTES

CONTRACTOR MUST CHECK AND VERIFY ALL DIMENSIONS SHOWN ON DRAWINGS WITH SITE CONDITIONS, PRIOR TO THE WORK AND NOTIFY THE ARCHITECT OF DIFFERENCES. AWAIT CLARIFICATION BEFORE CONTINUING.

DO NOT SCALE DRAWINGS.

ALL DRAWINGS, SPECIFICATIONS AND RELATED DOCUMENTS ARE THE COPYRIGHT PROPERTY OF THE ARCHITECT AND MUST BE RETURNED UPON REQUEST. REPRODUCTION OF DRAWINGS, SPECIFICATIONS AND RELATED DOCUMENTS IN PART OR IN WHOLE IS FORBIDDEN WITHOUT THE ARCHITECT'S WRITTEN PERMISSION.

THESE DRAWINGS ARE FOR PERMIT PURPOSES ONLY. THEY INDICATE DESIGN INTENT ONLY AND DO NOT FULLY DESCRIBE OR SPECIFY ALL CONDITIONS, MATERIAL OR ASSEMBLIES. REQUEST FURTHER INFORMATION FROM ARCHITECT PRIOR TO COMMENCING CONSTRUCTION AS REQUIRED.

ARCHITECT:
CARTER ΛI
DAVID CARTER ARCHITECTS INC.
688 Richmond St W, Suite 303 Toronto ON M6J 1C5 | 416 977 6300

MECHANICAL AND ELECTRICAL ENGINEERING:
QUASAR
250 Rowntree Dairy Road Woodbridge, ON L4L 9J7

CLIENT:
COLLINGWOOD G&M HOSPITAL

NUCLEAR MEDICINE SPECT/CT CAMERA
COLLINGWOOD GENERAL AND MARINE HOSPITAL
459 HUME STREET, COLLINGWOOD ON

PROJECT NORTH
TRUE NORTH

MECHANICAL DETAILS
2 OF 2

ENTERED: TZ
CHECKED: MM
DATE: 2025/12/09
PROJECT NO.
HC-24-173

DRAWING NO.
M401

EXHAUST FAN SCHEDULE

UNIT TAG	MANUFACTURER	MODEL	LOCATION	SERVICE	QTY	AIRFLOW (L/s)	E.S.P. (IN.W.C.)	FAN (RPM)	FAN (BHP)	ACOUSTIC PERFORMANCE	ELECTRICAL						REMARKS
										SOUND PRESSURE (DBA) (INLET/OUTLET)	FLA (A)	MOTOR (HP)	MOTOR (RPM)	V/PH/HZ	TYPE	EMERGENCY POWER	
EF-1	GREENHECK	SQ-95-VG	SPECT CT ROOM	WAITING / WASHROOM / NSD	1	172.3	0.3	1191	0.24	49/61	2.8	1/6	1191	120/1/60	DIRECT DRIVE	YES	1,2,3,4

NOTES:
1. FAN MOTOR TO BE ALUMINUM CONSTRUCTION, COMPLETE WITH ALUMINUM BACK DRAFT DAMPER ON OUTLET.
2. FAN MOTOR TO DIRECT DRIVE COMPLETE WITH VARIABLE SPEED CONTROLLER
3. EXHAUST FAN IS TO BE COMPLETE WITH FOUR (4) SPRING ISOLATORS SIZED FOR 50mm DEFLECTION, SUITABLE FOR INSTALLATION ON BASE MOUNTED UNISTRUT. REFER TO FLOOR PLANS FOR ADDITIONAL INFORMATION AND COORDINATE PROVISIONS WITH MECHANICAL CONTRACTOR.
4. FAN DIMENSIONS (INCHES): DUCT INLET W X H = 11.875 X 11.875, DUCT OUTLET W X H = 11.875 X 11.875, FAN OVERALL DIMENSIONS H X W X L = 15 X 15 X 16, WEIGHT 35 LBS

CAV BOX SCHEDULE

VALVE NO.	SERVING AREA/ROOM	LOCATION	MODEL	UNIT SIZE	DESIGN AIRFLOW CFM	MIN. AIRFLOW CFM	MAX. AIRFLOW CFM	MAX. APD inWG	REHEAT COIL								REMARKS
									CAPACITY MBH	EAT °F	LAT °F	EWT °F	LWT °F	FLOW GPM	WPD ftWG	FLUID TYPE	
CAV-1	SPECT C, CONTROL ROOM, NSD	SUB WAITING	EH PRICE - SDV	8	780	300	1227					150	130			WATER	1, 2, 3, 4
CAV-2	SUB WAITING	SUB WAITING	EH PRICE - SDV	7	320	95	800					150	130			WATER	1, 2, 3, 4
CAV-3	COLD WAITING, BMD, CHANGE ROOM	COLD WAITING	EH PRICE - SDV	7	420	95	800					150	130			WATER	1, 2, 3, 4

NOTE:
1. MAX NC 25 NOISE LEVEL CRITERIA.
2. ALL CAV EQUIPPED WITH 3 FOOT LONG INTEGRAL ATTENUATORS AND FIBER FREE FOAM.
3. CAV BOX SHALL BE BALANCED TO AIR FLOW RATE INDICATED ON THE DRAWINGS.
4. CAV BOX SHALL BE BY BASE BUILDING CONTROLS CONTRACTOR. CONTROLLER HANDING ARRANGEMENT SHALL BE CONFIRMED ON SITE BY THE MECHANICAL CONTRACTOR PRIOR TO INSTALLATION.

EVAPORATOR SCHEDULE

UNIT NO.	UNIT NAME	LOCATION	DIM/WEIGHT (mm/kg) HxWxD	AIRFLOW RATE (L/s)	MIN. inWG	UNIT VOLTAGE/PHASE/FREQ.	ELECTRICAL REQUIREMENTS MCA (A)	COOLING CAPACITY (kW)	HEATING CAPACITY (kW)	REMARKS
ME-1A	MITSUBISHI PEFY-P48NMHU-E2	SUB WAITING	380x1250x900 /69	441-633	-	208/1/60	4.16	14.07	-	WALL MOUNTED C/W 7-DAY PROGRAMMABLE THERMOSTAT, GRAVITY CONDENSATE, BAS ADAPTER. BAS TO MONITOR STATUS AND ALARMS. UPGRADE GRAPHICS AT BAS STATION AS REQUIRED.
ME-1C	MITSUBISHI PKFY-P12NLMU-E-TH	ELECTRICAL ROOM	299 x 773 x 237 /11.1	77-90-115-140	-	208/1/60	0.24	3.5	-	WALL MOUNTED C/W 7-DAY PROGRAMMABLE THERMOSTAT, GRAVITY CONDENSATE, BAS ADAPTER. BAS TO MONITOR STATUS AND ALARMS. UPGRADE GRAPHICS AT BAS STATION AS REQUIRED.

CONDENSER SCHEDULE

UNIT NO.	UNIT NAME	LOCATION	DIM/WEIGHT (mm/kg) HxWxD	AIRFLOW RATE (L/s)	ELECTRICAL REQUIREMENTS		COOLING CAPACITY (kW)	HEATING CAPACITY (kW)	REMARKS
					UNIT VOLTAGE/PHASE/FREQ.	MCA (A)			
ME-1B	MITSUBISHI PUMY-P60NKMU4	WALL MOUNTED	1338x1050x330 /136	2302	208/1/60	-	17.56	-	CONDENSER UNIT WALL MOUNTED C/W CRANKCASE HEATER AND THERMO EXPANSION VALVE, ULTRA LOW AMBIENT -40°C AND SNOW/WIND GUARDS. SECURED TO UNISTRUTS.

SCHEDULE OF GRILLES & DIFFUSERS

TYPE	SERVICE	MODEL NO.	MODEL SIZE (MM)	VOLUME CONTROL	FINISH	REMARKS
A1	CEILING SUPPLY	NAILOR 7500-O-12x12-24x24-SR	AS NOTED	YES	B12	1, 2, 3, 4,5
A2	CEILING SUPPLY	EH PRICE SPD	AS NOTED	YES	B12	1, 2, 3, 4
B1	CEILING RETURN/EXHAUST	EH PRICE 535	AS NOTED	YES	B12	1, 2, 3, 4
C1	CEILING RETURN/EXHAUST	EH PRICE 535	AS NOTED	YES	B12	1, 2, 3, 4
C2	CEILING RETURN/EXHAUST	EH PRICE 710ZDSS	250X250	YES	STAINLESS STEEL	1, 2, 3, 6, 7

NOTES:
1. ALL DIFFUSER AND GRILLE FRAMES SHALL SUIT CEILING CONSTRUCTION.
2. ALL DAMPERS SHALL BE THE SAME MATERIAL AS THE DIFFUSER OR GRILLE.
3. REFER TO ARCHITECT'S DRAWINGS FOR CEILING CONSTRUCTION.
4. GRILLE AND DIFFUSER COLOUR TO SUIT ARCHITECTURAL DIRECTION.
5. PROVIDE TRANSITION COLLAR FROM SQUARE TO ROUND NECK, NECK SIZE AS SHOWN ON DRAWING.
6. COMPLETE WITH STAINLESS STEEL SQUARE TO ROUND ADAPTER COLLAR.
7. COMPLETE WITH STAINLESS STEEL OPPOSED BLADE DAMPER

NO.	DATE	ISSUED
04	2026/01/06	ISSUED FOR TENDER
03	2025/12/09	ISSUED FOR PERMIT
02	2025/10/15	ISSUED FOR 50% CD
01	2025/06/17	ISSUED FOR 100% DD

NOTES

CONTRACTOR MUST CHECK AND VERIFY ALL DIMENSIONS SHOWN ON DRAWINGS WITH SITE CONDITIONS, PRIOR TO THE WORK AND NOTIFY THE ARCHITECT OF DIFFERENCES. AWAIT CLARIFICATION BEFORE CONTINUING.

DO NOT SCALE DRAWINGS.

ALL DRAWINGS, SPECIFICATIONS AND RELATED DOCUMENTS ARE THE COPYRIGHT PROPERTY OF THE ARCHITECT AND MUST BE RETURNED UPON REQUEST. REPRODUCTION OF DRAWINGS, SPECIFICATIONS AND RELATED DOCUMENTS IN PART OR IN WHOLE IS FORBIDDEN WITHOUT THE ARCHITECT'S WRITTEN PERMISSION.

THESE DRAWINGS ARE FOR PERMIT PURPOSES ONLY. THEY INDICATE DESIGN INTENT ONLY AND DO NOT FULLY DESCRIBE OR SPECIFY ALL CONDITIONS, MATERIAL OR ASSEMBLIES. REQUEST FURTHER INFORMATION FROM ARCHITECT PRIOR TO COMMENCING CONSTRUCTION AS REQUIRED.

ARCHITECT:
CARTER AI
DAVID CARTER ARCHITECTS INC.
688 Richmond St W, Suite 303 Toronto ON M6J 1C5 | 416 977 6300

MECHANICAL AND ELECTRICAL ENGINEERING:
QUASAR
250 Rowntree Dairy Road Woodbridge, ON L4L 9J7

CLIENT:
COLLINGWOOD G&M HOSPITAL

NUCLEAR MEDICINE
SPECT/CT CAMERA
COLLINGWOOD GENERAL AND MARINE HOSPITAL
459 HUME STREET, COLLINGWOOD ON

PROJECT NORTH
TRUE NORTH

MECHANICAL SCHEDULES

ENTERED: TZ
CHECKED: MM
DATE: 2025/12/09
PROJECT NO.
HC-24-173

DRAWING NO.
M500

ELECTRICAL LEGEND

SYMBOL	DESCRIPTION
LINETYPES	
	NEW WORK
	WORK TO BE DEMOLISHED, OR REMOVED
	EXISTING MATERIAL/EQUIPMENT/SERVICES TO REMAIN
	FUTURE WORK (NOT IN SCOPE)
	EXTENTS OF FIRE ALARM ZONE, WET LOCATION, OR OTHER AREA AS NOTED ON PLANS
ABBREVIATIONS	
E	EXISTING TO REMAIN
R	EXISTING TO BE DEMOLISHED/REMOVED
ER	EXISTING IN RELOCATED POSITION
RR	REMOVE AND RELOCATE
C	CEILING MOUNTED CONNECTION
W	WALL MOUNTED CONNECTION
F	FLOOR MOUNTED CONNECTION
℄	CENTRE LINE
AFF	ABOVE FINISHED FLOOR
AFG	ABOVE FINISHED GRADE
O/C	OVER COUNTER
U/C	UNDER CABINET
U/F	UNDER RAISED FLOOR
CCT	CIRCUIT
CTE	CONNECT TO EXISTING
AFCI	ARC FAULT CIRCUIT INTERRUPTER
GFCI	GROUND FAULT CIRCUIT INTERRUPTER
GFI	GROUND FAULT INTERRUPTER
IG	ISOLATED GROUND
TL	TWIST LOCK
TR	TAMPER RESISTANT
WG	WIRE GUARD
WP	WEATHER PROOF
EX	EXPLOSION PROOF
HZ	HAZARDOUS LOCATION
R/I	ROUGH-IN ONLY
NIC	NOT IN CONTRACT
SIM.	SIMILAR TO
TYP.	TYPICAL
ABBREVIATIONS - CODES AND STANDARDS	
OBC	ONTARIO BUILDING CODE
OESC	ONTARIO ELECTRICAL SAFETY CODE
OFC	ONTARIO FIRE CODE
ABBREVIATIONS - CEILING TYPES	
ACT	ACOUSTIC CEILING TILE (T-BAR)
EXP	EXPOSED CEILING
GB	GYPSUM BOARD CEILING
OWSJ	OPEN WEB STEEL JOISTS
PCC	PAINTED OR POPCORN CEILING ON EXPOSED CONCRETE
WD	WOOD CEILING
ANNOTATIONS	
CL	CLOSET
WR	WASHROOM
PLUMBING	
PTP	ELECTRONIC TRAP PRIMER
PSC	PLUMBING SENSOR CONTROL (TOUCHLESS FAUCETS)
HVAC	
	THERMOSTAT OR TEMPERATURE SENSOR
T	TIMER CONTROL
BBH	ELECTRIC BASEBOARD HEATER (BBH)
FFH	FORCED FLOW HEATER
ERV	ENERGY RECOVERY VENTILATOR
HRU	HEAT RECOVERY UNIT
MUA	MAKE-UP AIR UNIT
CONDUIT AND BOXES	
	CONDUIT WITH END BUSHING
	CONDUIT UP
	CONDUIT DOWN
	CONDUIT CONTINUES
JB	JUNCTION BOX
PB	PULL BOX
HH	HAND HOLE
CONNECTIONS TO EQUIPMENT	
DW	DISHWASHER
FR	FRIDGE
MW	MICROWAVE
HD	HAND DRYER, ALLOW UP TO 208V-1PH-20A
	1-PHASE DIRECT CONNECTION OUTLET AS NOTED.
	3-PHASE DIRECT CONNECTION OUTLET AS NOTED.
	SYSTEM FURNITURE WALL FEED FOR POWER AND TELECOMMUNICATIONS UNLESS NOTED OTHERWISE. 'C' ADJACENT TO SYMBOL DENOTES CEILING FEED, 'F' ADJACENT TO SYMBOL DENOTES FLOOR FEED.
W	ADJACENT TO 3-PHASE DIRECT CONNECTION, DENOTES WALL SYSTEM FURNITURE FEED FOR POWER AND COMMUNICATIONS.
	CONNECTION TO SINGLE PHASE MOTOR, HP (KW) AS NOTED. PROVIDE LOCAL DISCONNECT.
	THREE PHASE MOTOR, HP (KW) AS NOTED. PROVIDE LOCAL DISCONNECT.
LIGHTING CONTROLS REFER TO SPECIFICATIONS AND RESPECTIVE SCHEDULES FOR EXACT REQUIREMENTS	
	SWITCH OR OTHER USER INTERFACE DEVICE AS DESCRIBED ON LIGHTING CONTROLS SCHEDULE.
3W	3-WAY SWITCH
DIM	ADJACENT TO SWITCH, DENOTES DIMMING SWITCH.
K	ADJACENT TO SWITCH, DENOTES KEY SWITCH.
T	ADJACENT TO SWITCH, DENOTES COUNTDOWN TIMER SWITCH
AT	ADJACENT TO SWITCH, DENOTES ASTRONOMICAL TIMER SWITCH
DS	ADJACENT TO SWITCH, DENOTES DOOR SWITCH
PIR	PASSIVE INFRARED SENSOR
DT	DUAL TECHNOLOGY SENSOR
UT	ULTRASONIC SENSOR
OS	SENSOR (TYPE UNKNOWN)

THIS LEGEND IS GENERIC. ALL SYMBOLS LISTED MAY NOT BE APPLICABLE FOR THIS PROJECT. REFER TO FLOOR PLANS TO DETERMINE USED DEVICES AND EQUIPMENT.

ELECTRICAL LEGEND

SYMBOL	DESCRIPTION
M	ADJACENT TO SWITCH, DENOTES MASTER CONTROL FOR ALL LUMINAIRES IN A ROOM OR SPACE, OR AS NOTED.
	WALL MOUNTED SWITCH/OCCUPANCY SENSOR. PIR DENOTES 'PASSIVE INFRARED', DT DENOTES 'DUAL PASSIVE INFRARED/ULTRASONIC', LINE VOLTAGE TO SUIT CONTROLLED CIRCUIT, OR AS NOTED.
RP	RELAY PANEL
PP	POWER PACK
SC	SCENE CONTROLLER.
P	PHOTOCELL SENSOR.
PC	PHOTOCELL SENSOR, 'PC' DENOTES CLOSED LOOP PHOTOCELL CONTROL. 'PO' DENOTES OPEN LOOP PHOTOCELL CONTROL
DT	CEILING MOUNTED OCCUPANCY SENSOR. PIR DENOTES 'PASSIVE INFRARED', UT DENOTES 'ULTRASONIC' (OR MICROPHONIC), DT DENOTES 'DUAL TECHNOLOGY', 'OS' DENOTES UNKNOWN TECHNOLOGY.
DT	WALL MOUNTED OCCUPANCY SENSOR.
DISTRIBUTION EQUIPMENT	
	TRANSFORMER, PLAN VIEW
	SURFACE MOUNTED LIGHTING AND RECEPTACLE PANELBOARD
	RECESSED RECEPTACLE AND LIGHTING PANELBOARD
	DISTRIBUTION PANELBOARD
	DISCONNECT SWITCH
	FUSED DISCONNECT SWITCH
C	CONTACTOR
	LOOSE STARTER. COORDINATE STARTING CHARACTERISTIC WITH EQUIPMENT REQUIREMENTS.
	COMBINATION STARTER.
VFD	ADJACENT TO STARTER, DENOTES VARIABLE FREQUENCY DRIVE
POWER RECEPTACLES AND BOXES	
	120V U-GROUND DUPLEX RECEPTACLE.
	120V U-GROUND DUPLEX RECEPTACLE MOUNTED ABOVE COUNTER TOP OR AS INSTRUCTED ON SITE.
	120V U-GROUND 20A DUPLEX RECEPTACLE.
	120V U-GROUND DUPLEX RECEPTACLE MOUNTED ABOVE COUNTER TOP OR AS INSTRUCTED ON SITE.
	120V U-GROUND DUPLEX RECEPTACLE - AUTOMATICALLY CONTROLLED (ASHRAE 90.1-2013, 8.4.2).
	120V U-GROUND 20A DUPLEX RECEPTACLE - AUTOMATICALLY CONTROLLED (ASHRAE 90.1-2013, 8.4.2).
	120V U-GROUND DUPLEX RECEPTACLE - HALF OF RECEPTACLE AUTOMATICALLY CONTROLLED (ASHRAE 90,1-2013, 8.4.2).
	SPLIT RECEPTACLE. IF MANUALLY CONTROLLED, SHOWN CONNECTED TO SWITCH.
	SPLIT RECEPTACLE MOUNTED ABOVE COUNTER TOP OR AS INSTRUCTED ON SITE.
	120V U-GROUND QUAD RECEPTACLE.
	INDICATES RECEPTACLE COMPLETE WITH ONE TYPE A AND ONE TYPE C USB CHARGING PORTS.
	14-30R RECEPTACLE FOR LAUNDRY DRYER, OR OTHER RECEPTACLE AS NOTED.
	14-50R RECEPTACLE FOR ELECTRIC RANGE, OR OTHER RECEPTACLE AS NOTED. PROVIDE 40A/2P BREAKER TO SUIT. MOUNT AT 130 mm AFF.
	SPECIAL RECEPTACLE. VERIFY OUTLET REQUIREMENTS PRIOR TO ROUGH-IN.
	SPECIAL RECEPTACLE. VERIFY OUTLET REQUIREMENTS PRIOR TO ROUGH-IN.
	FLOOR RECEPTACLE OR RECEPTACLE IN FLOOR BOX (POWER ONLY)
	SERVICE POLE. PROVIDE POWER TO JUNCTION BOX IN CEILING SPACE ABOVE, DEVICES ON POLE AS NOTED ON PLANS.
FB1	ADJACENT TO FLOOR RECEPTACLE, DENOTES FLOOR BOX TYPE
•	ADJACENT TO RECEPTACLE, DENOTES DEVICE CONNECTED TO EMERGENCY POWER
LIGHTING FIXTURES SYMBOLS IN ACCORDANCE WITH IES DG-3-00 AND IES HB-10-11 WHERE NOT DETAILED OTHERWISE HERE. REFER TO LIGHTING FIXTURE SCHEDULE FOR FURTHER DETAILS AND EXACT FIXTURE REQUIREMENTS.	
	LINEAR LUMINAIRE, SURFACE MOUNTED TO CEILING
	LINEAR LUMINAIRE, RECESSED IN CEILING
	LINEAR LUMINAIRE, SUSPENDED; PENDANT, CHAIN, STEM, OR AIRCRAFT CABLE HUNG TO SUIT APPLICATION, OR AS NOTED IN SCHEDULE, "X", WHEN USED DENOTES POWER FEED LOCATION.
	LINEAR LUMINAIRE, WALL MOUNTED
	AS ABOVE, CONNECTED TO EMERGENCY OR NIGHT LIGHTING CIRCUIT AS INDICATED.
	ROUND OR SQUARE DOWNLIGHT, RECESSED
	RECESSED DOWNLIGHTS, CONNECTED TO EMERGENCY OR NIGHT LIGHT CIRCUIT
	ROUND SUSPENDED LUMINAIRE
	WALL SCONCE OR OTHER WALL MOUNTED LUMINAIRES.
EM	CONNECTED TO EMERGENCY NIGHT LIGHT CIRCUIT (24 HOUR)
CE	CONNECTED TO EMERGENCY CIRCUIT, PROVIDE CUL 924 LISTED SHUNT TRIP RELAY OR EQUAL TO PERMIT CONTROL OF LUMINAIRE WITH ZONING BASED ON LOCAL LIGHTING CONTROLS.
NL	LUMINAIRE CONNECTED TO NON-EMERGENCY NIGHT LIGHT CIRCUIT (24 HOUR)
A, B, Z1, Z2, ETC.	DENOTES ZONING/CIRCUTING ASSIGNMENTS FOR LUMINAIRES AND CONTROLS IN THE SAME SPACE.
EMERGENCY LIGHTING REFER TO EMERGENCY LIGHTING FIXTURE SCHEDULE FOR EXACT FIXTURE REQUIREMENTS.	
	CEILING OR WALL MOUNTED ILLUMINATED EXIT SIGN. SHADED AREA INDICATES ILLUMINATED FACE. PROVIDE DIRECTIONAL ARROWS AS INDICATED ON PLANS.
	CEILING OR WALL MOUNTED ILLUMINATED EXIT SIGN. SHADED AREA INDICATES ILLUMINATED FACE. PROVIDE DIRECTIONAL ARROWS AS INDICATED ON PLANS.
SL	DENOTES 'SELF-LUMINOUS' EXIT SIGN
PL	PHOTOLUMINOUS EXIT SIGN
	EMERGENCY LIGHTING BATTERY UNIT, WITH AND WITHOUT HEADS.
	ONE, TWO, AND THREE HEAD WALL MOUNTED EMERGENCY LIGHTING REMOTE UNITS.

THIS LEGEND IS GENERIC. ALL SYMBOLS LISTED MAY NOT BE APPLICABLE FOR THIS PROJECT. REFER TO FLOOR PLANS TO DETERMINE USED DEVICES AND EQUIPMENT.

ELECTRICAL LEGEND

SYMBOL	DESCRIPTION
	ONE, TWO, AND THREE HEAD CEILING MOUNTED EMERGENCY LIGHTING REMOTE UNITS.
	RECESSED EMERGENCY REMOTE HEAD.
EM	DENOTES "EMERGENCY"
CCT	CORRELATED COLOUR TEMPERATURE
CRI	COLOUR RENDERING INDEX
EXTERIOR LIGHTING	
	ARM MOUNTED LUMINAIRE ON POLE, DIRECTIONAL ARROW, WHERE INDICATED DENOTES PRIMARY LUMEN ORIENTATION.
	POST TOP LUMINAIRE ON POLE, DIRECTIONAL ARROW, WHERE INDICATED DENOTES PRIMARY LUMEN ORIENTATION.
	LIGHTING BOLLARD, DIRECTIONAL ARROW, WHERE INDICATED DENOTES PRIMARY LUMEN ORIENTATION.
	GROUND MOUNTED FLOOD LIGHT
TELECOMMUNICATIONS	
	SYSTEM FURNITURE FEED.
W	ADJACENT TO SYSTEM FURNITURE FEED, DENOTES WALL SYSTEM FURNITURE FEED FOR COMMUNICATIONS.
F	ADJACENT TO SYSTEM FURNITURE FEED, DENOTES FLOOR SYSTEM FURNITURE FEED FOR COMMUNICATIONS.
C	ADJACENT TO SYSTEM FURNITURE FEED, DENOTES CEILING SYSTEM FURNITURE FEED FOR COMMUNICATIONS (SERVICE POLE OR DROP CORD AS NOTED).
	CABLE TRAY (LADDER TYPE)
	CABLE TRAY (BASKET TYPE)
	WALL MOUNTED DATA (D) OR VOICE (V) OUTLET. PROVIDE 1V AND 1D UNLESS NOTED OTHERWISE.
	WALL MOUNTED VOICE (TELEPHONE) OUTLET. PROVIDE 1V UNLESS NOTED OTHERWISE.
	WALL MOUNTED DATA OUTLET. PROVIDE 1D UNLESS NOTED OTHERWISE.
	WALL MOUNTED TELEVISION OUTLET.
	VOICE, DATA, OR TV OUTLET AS DESCRIBED ABOVE, MOUNTED ABOVE COUNTER TOP OR AS INSTRUCTED ON SITE.
B	ADJACENT TO COMMUNICATIONS OUTLET, INDICATES BLANK-OFF PLATE.
HDMI	HDMI OUTLET.
AV	AUDIO VIDEO GANG, AS NOTED.
WAP	CEILING MOUNTED WIRELESS ACCESS POINT (WIFI)
S	AUDIO VISUAL SYSTEM SPEAKER, CEILING MOUNTED.
	AUDIO/VISUAL SYSTEM SPEAKER, WALL MOUNTED.
PA	PUBLIC ADDRESS SYSTEM SPEAKER, CEILING MOUNTED.
PA	PUBLIC ADDRESS SYSTEM SPEAKER, WALL MOUNTED.
	PUBLIC ADDRESS HORN SPEAKER WALL MOUNTED.
HS	PUBLIC ADDRESS SYSTEM HANDSET
ACC	PUBLIC ADDRESS SYSTEM ADMIN CONTROL CONSOLE
VOL	PUBLIC ADDRESS SPEAKER VOLUME CONTROL SWITCH.
	INTERCOM
IDS	VIDEO INTERCOM SYSTEM DOOR CALL STATION
IMS	VIDEO INTERCOM SYSTEM MASTER STATION
IDC	INSULATION DISPLACEMENT CONNECTION
	CLOCK.
MTX	GPS CLOCK SYSTEM MASTER TRANSMITTER
RX	GPS CLOCK SYSTEM GPS RECEIVER
RTX	GPS CLOCK SYSTEM SATELLITE TRANSMITTER (REPEATER)
RX	GPS CLOCK SYSTEM RECEIVER SWITCH
ACCESS CONTROL AND DOOR HARDWARE	
CR	CARD READER
DA	DOOR ALARM SOUNDER
DC	DOOR CONTACT
OHC	OVERHEAD DOOR CONTACT
EL	ELECTRIC LATCH
ES	ELECTRIC STRIKE
PT	ELECTRIC POWER TRANSFER CABLE
PTH	POWER TRANSFER HINGE
KS	KEY SWITCH
ML	ELECTROMAGNETIC LOCK
MLR	MOTORIZED LATCH RETRACTION. PROVIDE 120 V.
REX	REQUEST TO EXIT SENSOR
	MUSHROOM HEAD PUSH BUTTON FOR 'REQUEST TO EXIT' MAGLOCK RELEASE, OR OTHER PUSH BUTTON AS INDICATED
DR	DOOR RELEASE ADJACENT TO THE ABOVE, PUSHBUTTON INTEGRATED WITH ELECTRIFIED DOOR HARDWARE DEVICE.
	BARRIER FREE DOOR OPERATOR PUSH BUTTON
WS	TOUCHLESS "WAVE SWITCH" FOR DOOR OPERATOR CONTROL
	DOOR BELL C/W SOUNDER AND STROBE
	DOOR BELL (SOUNDER ONLY)
INTRUSION DETECTION	
	GLASS BREAK (GB)
MD	MOTION DETECTOR (MD)
KP	KEYPAD (KP)
VIDEO SURVEILLANCE	
	CCTV CAMERA
C/P	CCTV CAMERA, CEILING OR POLE MOUNTED
	CCTV CAMERA, WALL MOUNTED
PTZ	PAN-TILT-ZOOM
DURESS SYSTEM	
DB	DURESS BUTTON (MOUNTED ON UNDERSIDE OF TABLETOP)
DB-W	WALL MOUNTED DURESS BUTTON WITH POLYCARBONATE ANTI-TAMPER COVER
DB	DURESS SYSTEM STROBE LIGHT
FIRE DETECTION AND ALARM - GENERAL	
CACF	CENTRAL ALARM AND CONTROL FACILITY
FACP	FIRE ALARM CONTROL PANEL
FAAP	FIRE ALARM ANNUNICIATOR PANEL
FAAG	FIRE ALARM ACTIVE ANNUNCIATOR C/W GRAPHIC
FAPG	FIRE ALARM PASSIVE GRAPHIC
DGP	DATA GATHERING PANEL
FAMP	FIRE ALARM ULC MONITORING PANEL

THIS LEGEND IS GENERIC. ALL SYMBOLS LISTED MAY NOT BE APPLICABLE FOR THIS PROJECT. REFER TO FLOOR PLANS TO DETERMINE USED DEVICES AND EQUIPMENT.

ELECTRICAL LEGEND

SYMBOL	DESCRIPTION
FAZ	FIRE ALARM ZONE
FSZ	FIRE ALARM SUPERVISORY ZONE
FDSPCP	FIRE DETECTION, SUPPRESSION, AND PRE-ACTION CONTROL PANEL
FDSCP	FIRE DETECTION AND SUPPRESSION CONTROL PANEL
	FIRE ALARM PANEL (FACP, FAAP, FAMP) AS DENOTED ON PLANS.
FIRE DETECTION - INITIATION DEVICES	
	MANUAL PULL STATION (MPS)
LX	WHERE NOTED ADJACENT TO MANUAL PULL STATIONS, DENOTES PULL STATION C/W POLYCARBONATE (LEXAN) COVER.
WG	WHERE NOTED ADJACENT TO MANUAL PULL STATIONS, DENOTES PULL STATION C/W WIRE GUARD COVER.
A	WHERE NOTED ADJACENT TO MANUAL PULL STATIONS OR DETECTOR, DENOTES DEVICE C/W AUXILIARY CONTACT.
	PHOTOELECTRIC SMOKE DETECTOR
H	SAME AS ABOVE, WALL MOUNTED
SA	WHEN ADJACENT TO PHOTOELECTRIC SMOKE DETECTOR, INDICATES RESIDENTIAL SMOKE ALARM
	RESIDENTIAL SMOKE ALARM, 120 VOLT, COMPLETE WITH STROBE AND INTEGRAL CARBON MONOXIDE DETECTION.
H	SAME AS ABOVE, WALL MOUNTED
	DUCT MOUNTED SMOKE DETECTOR
CO	CARBON MONOXIDE DETECTOR
VESDA	VERY EARLY SMOKE DETECTING APPARATUS
BSDT	BEAM SMOKE DETECTOR TRANSMITTER
BSDR	BEAM SMOKE DETECTOR RECEIVER (OR REFLECTOR)
ASD	ASPIRATING SMOKE DETECTOR
	HEAT DETECTOR - 58 DEGREES C (135 DEGREES F) FIXED TEMPERATURE AND RATE OF RISE, RESTORABLE
H	SAME AS ABOVE, WALL MOUNTED
HT	ADJACENT TO HEAT DETECTOR, DENOTES "HIGH TEMPERATURE", 94 DEGREES C (200 DEGREES F) OR AS NOTED ON PLANS.
LHD	ADJACENT TO HEAT DETECTOR SYMBOL, DENOTES "LINEAR HEAT DETECTION CABLE".
	HEAT DETECTOR - 58 DEGREES C (135 DEGREES F) FIXED TEMPERATURE, NON-RESTORABLE
	HEAT DETECTOR - 94 DEGREES C (200 DEGREES F) FIXED TEMPERATURE, NON-RESTORABLE
	LINEAR HEAT DETECTION CABLE
FS	FLOW SWITCH
FIRE DETECTION AND ALARM - SUPERVISORY DEVICES	
LL	LOW TANK LEVEL
LP	LOSS OF POWER
LT	LOW TEMPERATURE
PS	PRESSURE SWITCH
SV	SUPERVISED VALVE
MON	FIRE ALARM MONITORING POINT, REFER TO FLOOR PLANS FOR DETAILS.
FIRE DETECTION AND ALARM - SIGNALLING DEVICES	
	FIRE ALARM BELL, WALL MOUNTED.
C	ADJACENT TO BELL OR HORN, DENOTES CEILING MOUNTED.
	FIRE ALARM HORN
M	ADJACENT TO FIRE ALARM HORN, DENOTES 'MINI' HORN
	FIRE ALARM HORN/STROBE, WALL MOUNTED.
	FIRE ALARM EVACUATION SPEAKER, CEILING MOUNTED
	FIRE ALARM EVACUATION SPEAKER, COMPLETE WITH STROBE LIGHT, CEILING MOUNTED
H	FIRE ALARM EVACUATION SPEAKER, WALL MOUNTED
H	FIRE ALARM EVACUATION SPEAKER COMPLETE WITH STROBE LIGHT, WALL MOUNTED
SS	SILENCE SWITCH
	FIRE ALARM WALL MOUNTED STROBE LIGHT
	FIRE ALARM CEILING MOUNTED STROBE LIGHT
FIRE DETECTION AND ALARM - VOICE COMMUNICATION DEVICES	
FF	EMERGENCY TELEPHONE FOR FIREFIGHTER'S USE
FIRE DETECTION AND ALARM - OTHER DEVICES	
EOL	END OF LINE DEVICE
WG	WIRE GUARD
DNE	"DO NOT ENTER" SIGN
KS	KEY SWITCH FOR FIREFIGHTER CONTROL OF ELEVATOR RECALL, OR AS NOTED
IM	ISOLATOR MODULE
R	OUTPUT RELAY, FUNCTION AS INDICATED
CM	CONTROL MODULE
MM	MONITOR MODULE
HO	MAGNETIC DOOR HOLDER AND RELEASING DEVICE ("HOLD OPEN")
	FIRE SUPPRESSION RELEASING STATION
	FIRE SUPPRESSION ABORT STATION
SINGLE LINE DIAGRAM	
	AIR CIRCUIT BREAKER
	MOLDED CASE CIRCUIT BREAKER
	DISCONNECT (UNFUSED)
	DISCONNECT (FUSED)
	FUSE
	METERING CABINET
	BUS DUCT
	TRANSFORMER
	AUTOMATIC TRANSFER SWITCH
	AUTOMATIC TRANSFER SWITCH C/W SINGLE SIDED BYPASS ISOLATION
	AUTOMATIC TRANSFER SWITCH C/W DOUBLE SIDED BYPASS ISOLATION
ATS	AUTOMATIC TRANSFER SWITCH

THIS LEGEND IS GENERIC. ALL SYMBOLS LISTED MAY NOT BE APPLICABLE FOR THIS PROJECT. REFER TO FLOOR PLANS TO DETERMINE USED DEVICES AND EQUIPMENT.

ELECTRICAL LEGEND

SYMBOL	DESCRIPTION
C	CONTACTOR
DP	DISTRIBUTION PANELBOARD
FTL	FEED THROUGH LUGS
LP	LIGHTING PANELBOARD
MCB	MOBILE CONNECTION BOX
MCC	MOTOR CONTROL CENTRE
MTS	MANUAL TRANSFER SWITCH
RP	RECEPTACLE PANELBOARD
SPD	SURGE PROTECTIVE DEVICE
STS	STATIC TRANSFER SWITCH
SWBD	SWITCHBOARD
TX	TRANSFORMER
UPS	UNINTERRUPTIBLE POWER SUPPLY
HEALTHCARE POWER	
A	CEILING COLUMN TYPE ISOLATED POWER CENTRE WITH MECHANICAL AND ELECTRICAL SERVICES. 'A' DENOTES TYPE AS SCHEDULED ON DRAWINGS OR SPECIFICATIONS.
LIM	LINE ISOLATION MONITORING FOR ISOLATED POWER CENTRES.
SIM	SLAVE MODULE FOR ISOLATED POWER CENTRES, TYPES AS SCHEDULED ON DRAWINGS.
RAP	REMOTE ALARM PANEL FOR ADJACENT ISOLATED POWER CENTRE.
RAS	CENTRALLY LOCATED REMOTE ALARM STATION FOR ISOLATED POWER CENTRES, SEE SCHEDULE.
G	GROUND JACK TO FOR ISOLATED POWER SYSTEM
GG	DOUBLE GROUND JACK FOR ISOLATED POWER SYSTEM
MGA	MEDICAL GAS ALARM PANEL
MGC	MEDICAL GAS CONTROL PANEL
MSG A	MEDICAL SERVICE COLUMN FOR PATIENT BEDHEAD ARRANGEMENT. 'A' DENOTES TYPE AS SCHEDULED ON THE DRAWINGS OR SPECIFICATIONS.
XR	POWER CONNECTION TO X-RAY VIEW BOXES
MTX	GPS CLOCK SYSTEM MASTER TRANSMITTER
RX	GPS CLOCK SYSTEM GPS RECEIVER
RTX	GPS CLOCK SYSTEM SATELLITE TRANSMITTER (REPEATER)
RX	GPS CLOCK SYSTEM RECEIVER SWITCH
	MONITOR
DA	DOCTOR'S DICTATION OUTLET
HEALTHCARE LIGHTING	
ORL	POWER CONNECTION TO OPERATING ROOM LIGHT
EL	POWER CONNECTION TO EXAMINATION LIGHT
ORL	POWER OPERATING ROOM LIGHT CONTROL
NURSE CALL DEVICES	
S	STAFF PRESENCE STATION
ID	INFRARED DETECTOR
ZL	NURSE CALL DOME LIGHT 'ZL', WHERE SHOWN DENOTES CORRIDOR ZONE LIGHT 'ZLC', WHERE SHOWN DENOTES CORRIDOR ZONE LIGHT C/W CHIME
NC1	SINGLE BED NURSE CALL BED STATION
NC2	DUAL BED NURSE CALL STATION
ES1	NURSE CALL PATIENT WASHROOM EMERGENCY STATION - PULL CORD TYPE
ES2	NURSE CALL EMERGENCY STATION - PULL CORD TYPE
ES3	NURSE CALL EMERGENCY STATION - WATERPROOF PULL CORD TYPE
ES4	NURSE CALL EMERGENCY STATION - PUSH BUTTON TYPE
ES5	NURSE CALL EMERGENCY STATION - WATERPROOF PUSH BUTTON TYPE
ES6	NURSE CALL EMERGENCY STATION - PULL CORD TYPE WITH PRIORITY CALL
NMS	NURSE CALL MASTER STATION
NSMS	NURSE CALL SUB-MASTER STATION
NDS	NURSE CALL DUTY STATION
NSS	NURSE CALL STAFF STATION
NSR	NURSE CALL STAFF REGISTER
NEQ	NURSE CALL EQUIPMENT AND AREA CONTROL UNITS
CB	NURSE CALL CODE BLUE STATION
CW	NURSE CALL CODE WHITE STATION
CP	NURSE CALL CODE PINK STATION
CW	NURSE CALL VIOLENT SITUATION WIRELESS (CODE WHITE) INFRARED RECEIVED, CEILING MOUNTED. 'RX', WHERE SHOWN DENOTES RADIO FREQUENCY RECEIVER.
PW	PATIENT WANDERING
IP	INFANT PROTECTION
TA	TELEMETRY ANTENNA
EPO	EMERGENCY POWER OFF
NCA	NARCOTICS CABINET ALARM ANNUNCIATOR 'DS', WHERE SHOWN INDICATES DOOR SWITCH
L	"LASER IN USE" LIGHTING FIXTURE - WALL MOUNTED
L	"LASER IN USE" LIGHTING FIXTURE - CEILING MOUNTED
XR	"X-RAY IN USE" LIGHTING FIXTURE - WALL MOUNTED
XR	"X-RAY IN USE" LIGHTING FIXTURE - WALL MOUNTED
DETAIL REFERENCES	
1	SHEET KEYNOTE
1 E101	REFER TO DETAIL. EXAMPLE SHOWN INDICATES REFERENCE TO DETAIL 1 ON DRAWING E101
1	REVISION NUMBER

THIS LEGEND IS GENERIC. ALL SYMBOLS LISTED MAY NOT BE APPLICABLE FOR THIS PROJECT. REFER TO FLOOR PLANS TO DETERMINE USED DEVICES AND EQUIPMENT.

ELECTRICAL DRAWING LIST

Sheet Number	SHEET NAME
E-001	ELECTRICAL LEGEND & DRAWING LIST
E-100	ELECTRICAL KEY PLAN
E-201	LIGHTING DEMOLITION WORK
E-202	LIGHTING NEW WORK
E-301	POWER & SYSTEM DEMOLITION
E-302	POWER & SYSTEM NEW WORK
E-700	ELECTRICAL SINGLE LINE DIAGRAM
E-800	ELEC DETAILS 1 OF 3
E-801	ELEC DETAILS 2 OF 3
E-802	ELEC DETAILS 3 OF 3
E-900	ELECTRICAL SCHEDULES
E-901	ELECTRICAL PANEL SCHEDULE - DEMO
E-902	ELECTRICAL PANEL SCHEDULE - NEW

NO.	DATE	ISSUED
04	2026/01/06	ISSUED FOR TENDER
03	2025/12/09	ISSUED FOR PERMIT
02	2025/10/15	ISSUED FOR 50% CD
01	2025/06/17	ISSUED FOR 100% DD

NOTES

CONTRACTOR MUST CHECK AND VERIFY ALL DIMENSIONS SHOWN ON DRAWINGS WITH SITE CONDITIONS, PRIOR TO THE WORK AND NOTIFY THE ARCHITECT OF DIFFERENCES. AWAIT CLARIFICATION BEFORE CONTINUING.

DO NOT SCALE DRAWINGS.

ALL DRAWINGS, SPECIFICATIONS AND RELATED DOCUMENTS ARE THE COPYRIGHT PROPERTY OF THE ARCHITECT AND MUST BE RETURNED UPON REQUEST. REPRODUCTION OF DRAWINGS, SPECIFICATIONS AND RELATED DOCUMENTS IN PART OR IN WHOLE IS FORBIDDEN WITHOUT THE ARCHITECT'S WRITTEN PERMISSION.

THESE DRAWINGS ARE FOR PERMIT PURPOSES ONLY. THEY INDICATE DESIGN INTENT ONLY AND DO NOT FULLY DESCRIBE OR SPECIFY ALL CONDITIONS, MATERIAL OR ASSEMBLIES. REQUEST FURTHER INFORMATION FROM ARCHITECT PRIOR TO COMMENCING CONSTRUCTION AS REQUIRED.

ARCHITECT:
CARTER AI
DAVID CARTER ARCHITECTS INC.
688 Richmond St W, Suite 303 Toronto ON M6J 1C5 | 416 977 6300

MECHANICAL AND ELECTRICAL ENGINEERING:
QUASAR
250 Rowntree Dairy Road Woodbridge, ON L4L 9J7

CLIENT:
COLLINGWOOD G&M HOSPITAL

NUCLEAR MEDICINE
SPECT/CT CAMERA
COLLINGWOOD GENERAL AND MARINE HOSPITAL
459 HUME STREET, COLLINGWOOD ON

PROJECT NORTH
TRUE NORTH

ELECTRICAL KEY PLAN

ENTERED: JM	DRAWING NO.
CHECKED: JE	E-100
DATE: 2025/12/09	
PROJECT NO. HC-24-173	

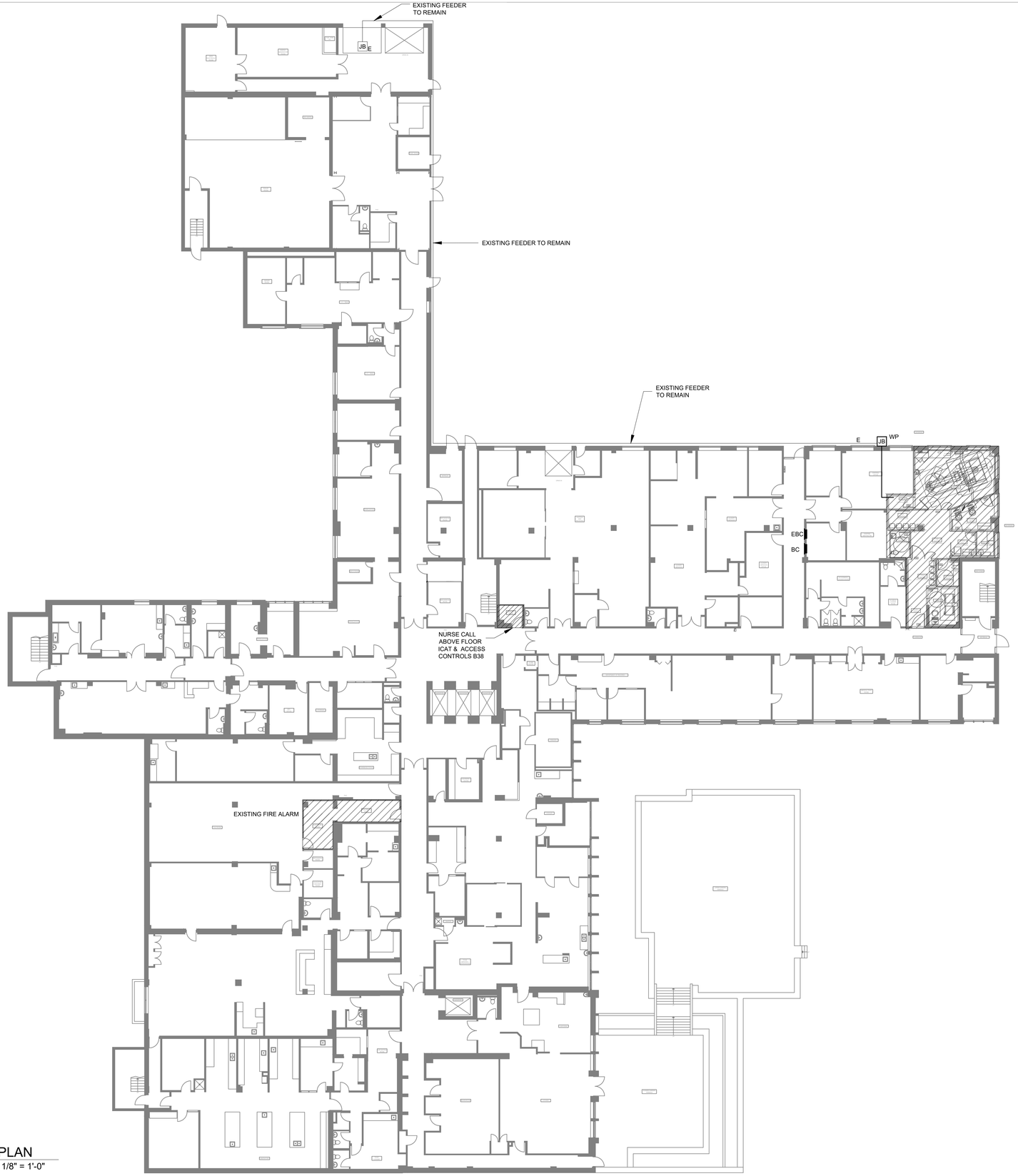

1 / E100 KEY PLAN
SCALE: 1/8" = 1'-0"

NO.	DATE	ISSUED
04	2026/01/06	ISSUED FOR TENDER
03	2025/12/09	ISSUED FOR PERMIT
02	2025/10/15	ISSUED FOR 50% CD
01	2025/06/17	ISSUED FOR 100% DD

NOTES

CONTRACTOR MUST CHECK AND VERIFY ALL DIMENSIONS SHOWN ON DRAWINGS WITH SITE CONDITIONS, PRIOR TO THE WORK AND NOTIFY THE ARCHITECT OF DIFFERENCES. AWAIT CLARIFICATION BEFORE CONTINUING.

DO NOT SCALE DRAWINGS.

ALL DRAWINGS, SPECIFICATIONS AND RELATED DOCUMENTS ARE THE COPYRIGHT PROPERTY OF THE ARCHITECT AND MUST BE RETURNED UPON REQUEST. REPRODUCTION OF DRAWINGS, SPECIFICATIONS AND RELATED DOCUMENTS IN PART OR IN WHOLE IS FORBIDDEN WITHOUT THE ARCHITECT'S WRITTEN PERMISSION.

THESE DRAWINGS ARE FOR PERMIT PURPOSES ONLY. THEY INDICATE DESIGN INTENT ONLY AND DO NOT FULLY DESCRIBE OR SPECIFY ALL CONDITIONS, MATERIAL OR ASSEMBLIES. REQUEST FURTHER INFORMATION FROM ARCHITECT PRIOR TO COMMENCING CONSTRUCTION AS REQUIRED.

ARCHITECT:
CARTER AI
DAVID CARTER ARCHITECTS INC.
688 Richmond St W, Suite 303 Toronto ON M6J 1C5 | 416 977 6300

MECHANICAL AND ELECTRICAL ENGINEERING:
QUASAR
250 Rowntree Dairy Road Woodbridge, ON L4L 9J7

CLIENT:
COLLINGWOOD G&M HOSPITAL

NUCLEAR MEDICINE SPECT/CT CAMERA

COLLINGWOOD GENERAL AND MARINE HOSPITAL

459 HUME STREET, COLLINGWOOD ON

PROJECT NORTH

TRUE NORTH

ELECTRICAL KEY PLAN

ENTERED: JM
CHECKED: JE
DATE: 2025/12/09
PROJECT NO.
HC-24-173

DRAWING NO.
E-100

GENERAL SHEET NOTES

1. IN EVERY INSTANCE WHERE IT IS REQUIRED IN THE SPECIFICATION OR ON DRAWING THAT EQUIPMENT AND MATERIALS BE REMOVED FROM EXISTING LOCATIONS AND RE-INSTALLED, EITHER IN WHOLE OR IN PART IN NEW LOCATIONS, ALL SUCH EQUIPMENT AND MATERIALS SHALL BE THOROUGHLY CLEANED AND WHERE NECESSARY PUT INTO GOOD OPERATING CONDITION BEFORE BEING RE-INSTALLED IN THE NEW LOCATION. TEST ALL PARTS OF THE RE-USED OR RELOCATED ELECTRICAL EQUIPMENT AND CORRECT ALL FAULTS AND GROUNDS.
2. ALL OPENINGS IN BUILDING RISER, IF APPLICABLE, SHALL BE SEALED WITH APPROVED FIRE STOP MATERIAL. ANY FIREPROOFING MATERIAL REMOVED WILL BE REPLACED WITH A SUITABLE AND APPROVED FIREPROOFING MATERIAL AND SHALL BE INSTALLED AS PER MANUFACTURER'S RECOMMENDATIONS TO APPLICABLE BUILDING AND FIRE CODES.
3. CONTRACTOR TO CONDUCT OWN SURVEY AND VERIFY EXISTING CONDITIONS.
4. COORDINATE WITH THE CLIENT TO CONFIRM EQUIPMENT OR SYSTEMS/DEVICES TO REMAIN.
5. CONTRACTOR SHALL BE RESPONSIBLE FOR ALL REFINISHING OF DAMAGED BUILDING AREAS AND FINISHES AFFECTED BY THE WORK AS OUTLINED UNDER SCOPE OF WORK OF THIS PROJECT.
6. ALL INSTALLATIONS WITHIN EXISTING AREAS SHALL BE COORDINATED WITH OWNER AND BASE BUILDING MANAGEMENT. INSTALLATION MUST BE PERFORMED IN A MANNER TO ELIMINATE ANY INTERFERENCES TO STAFF AND NORMAL OPERATION OF THE FACILITY.
7. THE CONTRACTOR IS RESPONSIBLE FOR THE INSTALLATION AND DISTRIBUTION OF TEMPORARY POWER AND LIGHTING WITHIN THE PREMISES DURING THE CONSTRUCTION PERIOD. EXPOSED ELECTRICAL CORDS OUTSIDE THE AREA OF WORK SHALL NOT BE PERMITTED.
8. CONTRACTOR SHALL BE RESPONSIBLE FOR COORDINATION OF ALL THE WORK WITH ALL OTHER TRADES, CONSULTANTS, AND THE OWNER. ALL WORK SHALL BE SCHEDULED AND CARRIED OUT BY THE CONTRACTOR IN A MANNER TO ENSURE CONTINUED AND NON-INTERRUPTED OPERATION OF EXISTING FACILITY.
9. CONTRACTOR SHALL IDENTIFY AND LABEL CLEARLY ALL CIRCUITS, WIRING, SERVICES, JUNCTION BOXES, PULLBOXES, DATA DROPS, DEVICES AND EQUIPMENT INSTALLED AND CONNECTED UNDER SCOPE OF WORK OF THIS PROJECT. IDENTIFICATION SHALL BE AS PER OWNER'S REQUIREMENTS AND ALL MARKINGS SHALL BE OF NON-ERASABLE LAMACOID TYPE. COORDINATE ALL LABELING WITH THE OWNER AND CONSULTANT.
10. CONTRACTOR TO ENSURE ANY DAMAGE TO EXISTING ELECTRICAL CONDUIT AND CONNECTION TO BE REPLACED OR FIXED PRIOR TO RE-INSTALLATION.
11. CONTRACTOR TO NOTIFY OWNER OF ANY EXISTING DAMAGES PRIOR TO COMMENCING OF WORK. ALL EXISTING EQUIPMENT AND FIXTURES INSIDE THE AREA OF WORK IS TO BE THOROUGHLY INSPECTED, ANY COMPROMISE TO THE INTEGRITY SHOULD BE MADE KNOWN TO THE OWNER.
12. CONTRACTOR TO TRACK AND CONFIRM LOCATION OF FEEDER AND BREAKER TO SOURCE PRIOR TO DISCONNECTION, AND ENSURE BREAKER IS SECURELY TURNED OFF AND LOCKED.
13. WHEREVER POSSIBLE, REUSE EXISTING CIRCUITS MADE AVAILABLE DURING DEMOLITION PHASE. WHERE NEEDED PROVIDE AND INSTALL NEW COMPATIBLE BREAKERS AND WIRING. CONTRACTOR TO VERIFY AVAILABLE CIRCUITS ON SITE, AS PANEL BOARD SCHEDULES MAY NOT BE UP TO DATE
14.

DEMOLITION SHEET NOTES

1. COORDINATE ALL DEMOLITION WORK WITH GENERAL CONTRACTOR. REFER TO CONSTRUCTION PHASING SCHEDULE.
2. CONTRACTOR TO VISIT THE SITE DURING THE TENDERING PERIOD TO DETERMINE THE EXACT SCOPE OF DEMOLITION WORK AND TO BECOME THOROUGHLY FAMILIAR WITH ALL CONDITIONS TO MEET IN CARRYING OUT THE SCOPE. REQUEST FOR EXTRAS WILL NOT BE CONSIDERED FOR FAILURE TO PROPERLY EVALUATE CONDITIONS WHICH AFFECT THE SCOPE OF DEMOLITION WORK.
3. IN SOME CASES, GENERAL LOCATIONS AND TYPES OF SOME ELECTRICAL EQUIPMENT AND LIGHT FIXTURES ARE INDICATED IN ORDER TO ASSIST IN EVALUATING SCOPE OF DEMOLITION WORK.
4. ALL EXISTING LIGHTING FIXTURES WITHIN SCOPE OF WORK IS TO BE DEMOLISHED AND REPLACED WITH NEW FIXTURES.
5. KEEP EXISTING CIRCUITS AND FEEDERS FOR DEMOLISHED LIGHTS AND REUSE TO SERVE NEW FIXTURES.
6. ELECTRICAL CONTRACTOR TO PRICE FOR UP TO 5% FOR ADDITIONAL DEVICES THAT MAY NOT BE CAPTURED IN PLAN DUE TO EXISTING SITE CONDITIONS.

SHEET KEYNOTES

1. WORK IN THIS AREA TO BE DEMOLISHED AND RENOVATED FIRST IN ORDER TO RETURN THE SPACE TO FULL USE AS SOON AS POSSIBLE.
2. RETAIN EXISTING CIRCUITS (CONDUIT AND FEEDER) TO SERVE NEW LIGHTING. ELECTRICAL CONTRACTOR TO PRICE FOR ANY MODIFICATION TO EXISTING CONDUIT AND FEEDER.

1 M201 LIGHTING - DEMO WORK
SCALE: 1/4" = 1'-0"

NO.	DATE	ISSUED
04	2026/01/06	ISSUED FOR TENDER
03	2025/12/09	ISSUED FOR PERMIT
02	2025/10/15	ISSUED FOR 50% CD
01	2025/06/17	ISSUED FOR 100% DD

NOTES

CONTRACTOR MUST CHECK AND VERIFY ALL DIMENSIONS SHOWN ON DRAWINGS WITH SITE CONDITIONS, PRIOR TO THE WORK AND NOTIFY THE ARCHITECT OF DIFFERENCES. AWAIT CLARIFICATION BEFORE CONTINUING.

DO NOT SCALE DRAWINGS.

ALL DRAWINGS, SPECIFICATIONS AND RELATED DOCUMENTS ARE THE COPYRIGHT PROPERTY OF THE ARCHITECT AND MUST BE RETURNED UPON REQUEST. REPRODUCTION OF DRAWINGS, SPECIFICATIONS AND RELATED DOCUMENTS IN PART OR IN WHOLE IS FORBIDDEN WITHOUT THE ARCHITECT'S WRITTEN PERMISSION.

THESE DRAWINGS ARE FOR PERMIT PURPOSES ONLY. THEY INDICATE DESIGN INTENT ONLY AND DO NOT FULLY DESCRIBE OR SPECIFY ALL CONDITIONS, MATERIAL OR ASSEMBLIES. REQUEST FURTHER INFORMATION FROM ARCHITECT PRIOR TO COMMENCING CONSTRUCTION AS REQUIRED.

ARCHITECT:
CARTER AI
DAVID CARTER ARCHITECTS INC.
688 Richmond St W, Suite 303 Toronto ON M6J 1C5 | 416 977 6300

MECHANICAL AND ELECTRICAL ENGINEERING:
QUASAR
250 Rowntree Dairy Road Woodbridge, ON L4L 9J7

CLIENT:
COLLINGWOOD G&M HOSPITAL

NUCLEAR MEDICINE SPECT/CT CAMERA
COLLINGWOOD GENERAL AND MARINE HOSPITAL
459 HUME STREET, COLLINGWOOD ON

PROJECT NORTH
TRUE NORTH

LIGHTING - DEMO WORK

ENTERED: JM
CHECKED: JE
DATE: 2025/12/09
PROJECT NO. HC-24-173

DRAWING NO. E201

GENERAL SHEET NOTES

1. IN EVERY INSTANCE WHERE IT IS REQUIRED IN THE SPECIFICATION OR ON DRAWING THAT EQUIPMENT AND MATERIALS BE REMOVED FROM EXISTING LOCATIONS AND RE-INSTALLED, EITHER IN WHOLE OR IN PART IN NEW LOCATIONS, ALL SUCH EQUIPMENT AND MATERIALS SHALL BE THOROUGHLY CLEANED AND WHERE NECESSARY PUT INTO GOOD OPERATING CONDITION BEFORE BEING RE-INSTALLED IN THE NEW LOCATION. TEST ALL PARTS OF THE RE-USED OR RELOCATED ELECTRICAL EQUIPMENT AND CORRECT ALL FAULTS AND GROUNDS.
2. ALL OPENINGS IN BUILDING RISER, IF APPLICABLE, SHALL BE SEALED WITH APPROVED FIRE STOP MATERIAL. ANY FIREPROOFING MATERIAL REMOVED WILL BE REPLACED WITH A SUITABLE AND APPROVED FIREPROOFING MATERIAL AND SHALL BE INSTALLED AS PER MANUFACTURER'S RECOMMENDATIONS TO APPLICABLE BUILDING AND FIRE CODES.
3. CONTRACTOR TO CONDUCT OWN SURVEY AND VERIFY EXISTING CONDITIONS.
4. COORDINATE WITH THE CLIENT TO CONFIRM EQUIPMENT OR SYSTEMS/DEVICES TO REMAIN.
5. CONTRACTOR SHALL BE RESPONSIBLE FOR ALL REFINISHING OF DAMAGED BUILDING AREAS AND FINISHES AFFECTED BY THE WORK AS OUTLINED UNDER SCOPE OF WORK OF THIS PROJECT.
6. ALL INSTALLATIONS WITHIN EXISTING AREAS SHALL BE COORDINATED WITH OWNER AND BASE BUILDING MANAGEMENT. INSTALLATION MUST BE PERFORMED IN A MANNER TO ELIMINATE ANY INTERFERENCES TO STAFF AND NORMAL OPERATION OF THE FACILITY.
7. THE CONTRACTOR IS RESPONSIBLE FOR THE INSTALLATION AND DISTRIBUTION OF TEMPORARY POWER AND LIGHTING WITHIN THE PREMISES DURING THE CONSTRUCTION PERIOD. EXPOSED ELECTRICAL CORDS OUTSIDE THE AREA OF WORK SHALL NOT BE PERMITTED.
8. CONTRACTOR SHALL BE RESPONSIBLE FOR COORDINATION OF ALL THE WORK WITH ALL OTHER TRADES, CONSULTANTS, AND THE OWNER. ALL WORK SHALL BE SCHEDULED AND CARRIED OUT BY THE CONTRACTOR IN A MANNER TO ENSURE CONTINUED AND NON-INTERRUPTED OPERATION OF EXISTING FACILITY.
9. CONTRACTOR SHALL IDENTIFY AND LABEL CLEARLY ALL CIRCUITS, WIRING, SERVICES, JUNCTION BOXES, PULLBOXES, DATA DROPS, DEVICES AND EQUIPMENT INSTALLED AND CONNECTED UNDER SCOPE OF WORK OF THIS PROJECT. IDENTIFICATION SHALL BE AS PER OWNER'S REQUIREMENTS AND ALL MARKINGS SHALL BE OF NON-ERASABLE LAMACOID TYPE. COORDINATE ALL LABELING WITH THE OWNER AND CONSULTANT.
10. CONTRACTOR TO ENSURE ANY DAMAGE TO EXISTING ELECTRICAL CONDUIT AND CONNECTION TO BE REPLACED OR FIXED PRIOR TO RE-INSTALLATION.
11. CONTRACTOR TO NOTIFY OWNER OF ANY EXISTING DAMAGES PRIOR TO COMMENCING OF WORK. ALL EXISTING EQUIPMENT AND FIXTURES INSIDE THE AREA OF WORK IS TO BE THOROUGHLY INSPECTED, ANY COMPROMISE TO THE INTEGRITY SHOULD BE MADE KNOWN TO THE OWNER.
12. CONTRACTOR TO TRACK AND CONFIRM LOCATION OF FEEDER AND BREAKER TO SOURCE PRIOR TO DISCONNECTION, AND ENSURE BREAKER IS SECURELY TURNED OFF AND LOCKED.
13. WHEREVER POSSIBLE, REUSE EXISTING CIRCUITS MADE AVAILABLE DURING DEMOLITION PHASE. WHERE NEEDED PROVIDE AND INSTALL NEW COMPATIBLE BREAKERS AND WIRING. CONTRACTOR TO VERIFY AVAILABLE CIRCUITS ON SITE, AS PANEL BOARD SCHEDULES MAY NOT BE UP TO DATE
14.

SHEET KEYNOTES

1. WORK IN THIS AREA TO BE DEMOLISHED AND RENOVATED FIRST IN ORDER TO RETURN THE SPACE TO FULL USE AS SOON AS POSSIBLE

1 LIGHTING - NEW WORK
SCALE: 1/4" = 1'-0"

NO.	DATE	ISSUED
04	2026/01/06	ISSUED FOR TENDER
03	2025/12/09	ISSUED FOR PERMIT
02	2025/10/15	ISSUED FOR 50% CD
01	2025/06/17	ISSUED FOR 100% DD

NOTES

CONTRACTOR MUST CHECK AND VERIFY ALL DIMENSIONS SHOWN ON DRAWINGS WITH SITE CONDITIONS, PRIOR TO THE WORK AND NOTIFY THE ARCHITECT OF DIFFERENCES. AWAIT CLARIFICATION BEFORE CONTINUING.

DO NOT SCALE DRAWINGS.

ALL DRAWINGS, SPECIFICATIONS AND RELATED DOCUMENTS ARE THE COPYRIGHT PROPERTY OF THE ARCHITECT AND MUST BE RETURNED UPON REQUEST. REPRODUCTION OF DRAWINGS, SPECIFICATIONS AND RELATED DOCUMENTS IN PART OR IN WHOLE IS FORBIDDEN WITHOUT THE ARCHITECT'S WRITTEN PERMISSION.

THESE DRAWINGS ARE FOR PERMIT PURPOSES ONLY. THEY INDICATE DESIGN INTENT ONLY AND DO NOT FULLY DESCRIBE OR SPECIFY ALL CONDITIONS, MATERIAL OR ASSEMBLIES. REQUEST FURTHER INFORMATION FROM ARCHITECT PRIOR TO COMMENCING CONSTRUCTION AS REQUIRED.

ARCHITECT:
CARTER AI
DAVID CARTER ARCHITECTS INC.
688 Richmond St W, Suite 303 Toronto ON M6J 1C5 | 416 977 6300

MECHANICAL AND ELECTRICAL ENGINEERING:
QUASAR
250 Rowntree Dairy Road Woodbridge, ON L4L 9J7

CLIENT:
COLLINGWOOD G&M HOSPITAL

NUCLEAR MEDICINE
SPECT/CT CAMERA
COLLINGWOOD GENERAL AND MARINE HOSPITAL
459 HUME STREET, COLLINGWOOD ON

PROJECT NORTH
TRUE NORTH

LIGHTING - NEW WORK

ENTERED:	JM
CHECKED:	JE
DATE:	2025/12/09
PROJECT NO.	HC-24-173
DRAWING NO.	E202

GENERAL SHEET NOTES

1. IN EVERY INSTANCE WHERE IT IS REQUIRED IN THE SPECIFICATION OR ON DRAWING THAT EQUIPMENT AND MATERIALS BE REMOVED FROM EXISTING LOCATIONS AND RE-INSTALLED, EITHER IN WHOLE OR IN PART IN NEW LOCATIONS, ALL SUCH EQUIPMENT AND MATERIALS SHALL BE THOROUGHLY CLEANED AND WHERE NECESSARY PUT INTO GOOD OPERATING CONDITION BEFORE BEING RE-INSTALLED IN THE NEW LOCATION. TEST ALL PARTS OF THE RE-USED OR RELOCATED ELECTRICAL EQUIPMENT AND CORRECT ALL FAULTS AND GROUNDS.
2. ALL OPENINGS IN BUILDING RISER, IF APPLICABLE, SHALL BE SEALED WITH APPROVED FIRE STOP MATERIAL. ANY FIREPROOFING MATERIAL REMOVED WILL BE REPLACED WITH A SUITABLE AND APPROVED FIREPROOFING MATERIAL AND SHALL BE INSTALLED AS PER MANUFACTURER'S RECOMMENDATIONS TO APPLICABLE BUILDING AND FIRE CODES.
3. CONTRACTOR TO CONDUCT OWN SURVEY AND VERIFY EXISTING CONDITIONS.
4. COORDINATE WITH THE CLIENT TO CONFIRM EQUIPMENT OR SYSTEMS/DEVICES TO REMAIN.
5. CONTRACTOR SHALL BE RESPONSIBLE FOR ALL REFINISHING OF DAMAGED BUILDING AREAS AND FINISHES AFFECTED BY THE WORK AS OUTLINED UNDER SCOPE OF WORK OF THIS PROJECT.
6. ALL INSTALLATIONS WITHIN EXISTING AREAS SHALL BE COORDINATED WITH OWNER AND BASE BUILDING MANAGEMENT. INSTALLATION MUST BE PERFORMED IN A MANNER TO ELIMINATE ANY INTERFERENCES TO STAFF AND NORMAL OPERATION OF THE FACILITY.
7. THE CONTRACTOR IS RESPONSIBLE FOR THE INSTALLATION AND DISTRIBUTION OF TEMPORARY POWER AND LIGHTING WITHIN THE PREMISES DURING THE CONSTRUCTION PERIOD. EXPOSED ELECTRICAL CORDS OUTSIDE THE AREA OF WORK SHALL NOT BE PERMITTED.
8. CONTRACTOR SHALL BE RESPONSIBLE FOR COORDINATION OF ALL THE WORK WITH ALL OTHER TRADES, CONSULTANTS, AND THE OWNER. ALL WORK SHALL BE SCHEDULED AND CARRIED OUT BY THE CONTRACTOR IN A MANNER TO ENSURE CONTINUED AND NON-INTERRUPTED OPERATION OF EXISTING FACILITY.
9. CONTRACTOR SHALL IDENTIFY AND LABEL CLEARLY ALL CIRCUITS, WIRING, SERVICES, JUNCTION BOXES, PULLBOXES, DATA DROPS, DEVICES AND EQUIPMENT INSTALLED AND CONNECTED UNDER SCOPE OF WORK OF THIS PROJECT. IDENTIFICATION SHALL BE AS PER OWNER'S REQUIREMENTS AND ALL MARKINGS SHALL BE OF NON-ERASABLE LAMACOID TYPE. COORDINATE ALL LABELING WITH THE OWNER AND CONSULTANT.
10. CONTRACTOR TO ENSURE ANY DAMAGE TO EXISTING ELECTRICAL CONDUIT AND CONNECTION TO BE REPLACED OR FIXED PRIOR TO RE-INSTALLATION.
11. CONTRACTOR TO NOTIFY OWNER OF ANY EXISTING DAMAGES PRIOR TO COMMENCING OF WORK. ALL EXISTING EQUIPMENT AND FIXTURES INSIDE THE AREA OF WORK IS TO BE THOROUGHLY INSPECTED, ANY COMPROMISE TO THE INTEGRITY SHOULD BE MADE KNOWN TO THE OWNER.
12. CONTRACTOR TO TRACK AND CONFIRM LOCATION OF FEEDER AND BREAKER TO SOURCE PRIOR TO DISCONNECTION, AND ENSURE BREAKER IS SECURELY TURNED OFF AND LOCKED.
13. WHEREVER POSSIBLE, REUSE EXISTING CIRCUITS MADE AVAILABLE DURING DEMOLITION PHASE. WHERE NEEDED PROVIDE AND INSTALL NEW COMPATIBLE BREAKERS AND WIRING. CONTRACTOR TO VERIFY AVAILABLE CIRCUITS ON SITE, AS PANEL BOARD SCHEDULES MAY NOT BE UP TO DATE
14.

DEMOLITION SHEET NOTES

1. COORDINATE ALL DEMOLITION WORK WITH GENERAL CONTRACTOR. REFER TO CONSTRUCTION PHASING SCHEDULE.
2. CONTRACTOR TO VISIT THE SITE DURING THE TENDERING PERIOD TO DETERMINE THE EXACT SCOPE OF DEMOLITION WORK AND TO BECOME THOROUGHLY FAMILIAR WITH ALL CONDITIONS TO MEET IN CARRYING OUT THE SCOPE. REQUEST FOR EXTRAS WILL NOT BE CONSIDERED FOR FAILURE TO PROPERLY EVALUATE CONDITIONS WHICH AFFECT THE SCOPE OF DEMOLITION WORK.
3. IN SOME CASES, GENERAL LOCATIONS AND TYPES OF SOME ELECTRICAL EQUIPMENT AND LIGHT FIXTURES ARE INDICATED IN ORDER TO ASSIST IN EVALUATING SCOPE OF DEMOLITION WORK.
4. ELECTRICAL CONTRACTOR TO PRICE UP TO 5% FOR ADDITIONAL DEVICES THAT MAY NOT BE CAPTURED IN PLAN DUE TO EXISTING SITE CONDITIONS.

SHEET KEYNOTES

1. WORK IN THIS AREA TO BE DEMOLISHED AND RENOVATED FIRST IN ORDER TO RETURN THE SPACE TO FULL USE AS SOON AS POSSIBLE

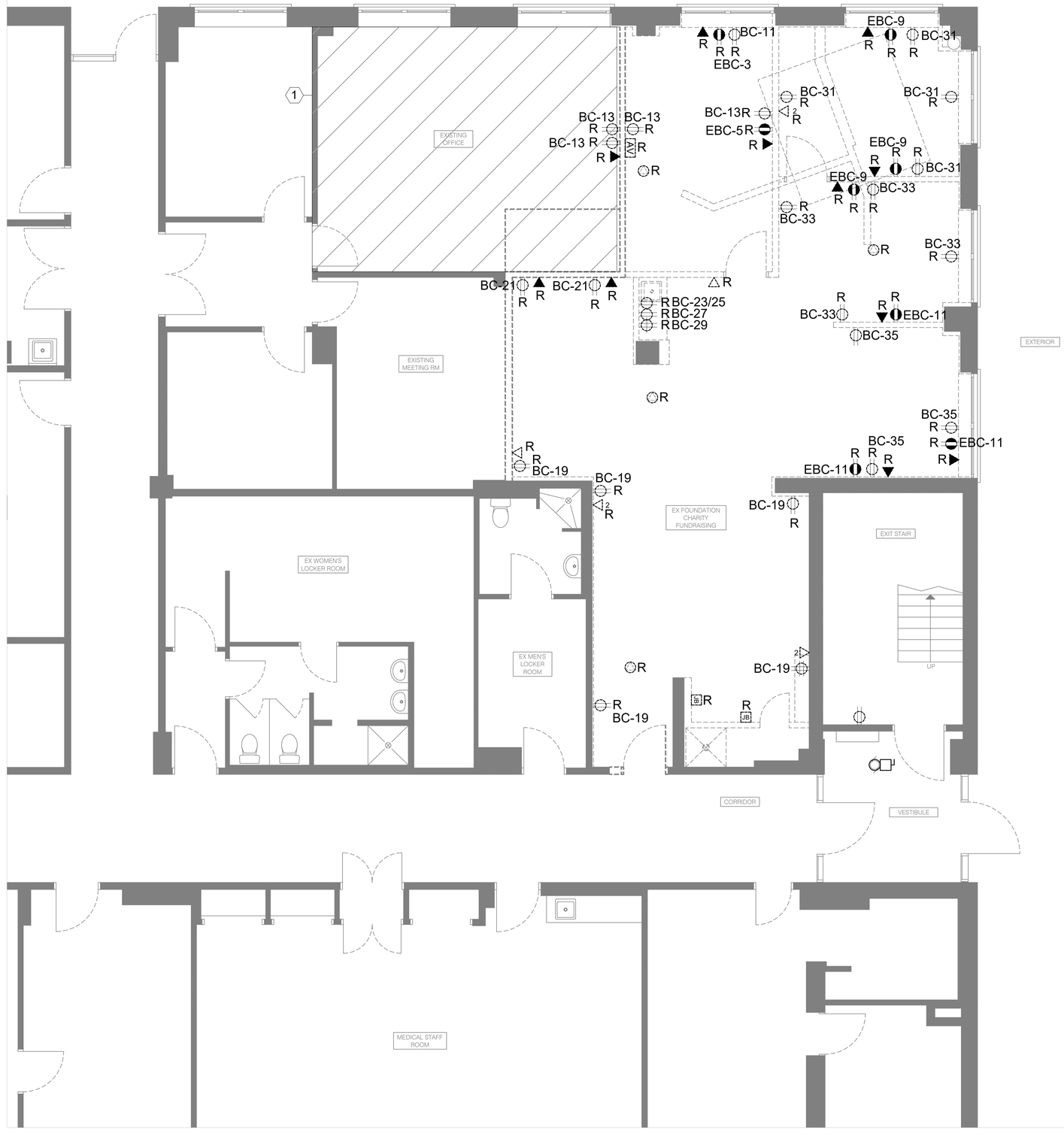

1 E301 POWER & SYSTEM - DEMO WORK
SCALE: 1/4" = 1'-0"

NO.	DATE	ISSUED
04	2026/01/06	ISSUED FOR TENDER
03	2025/12/09	ISSUED FOR PERMIT
02	2025/10/15	ISSUED FOR 50% CD
01	2025/06/17	ISSUED FOR 100% DD

NOTES

CONTRACTOR MUST CHECK AND VERIFY ALL DIMENSIONS SHOWN ON DRAWINGS WITH SITE CONDITIONS, PRIOR TO THE WORK AND NOTIFY THE ARCHITECT OF DIFFERENCES. AWAIT CLARIFICATION BEFORE CONTINUING.

DO NOT SCALE DRAWINGS.

ALL DRAWINGS, SPECIFICATIONS AND RELATED DOCUMENTS ARE THE COPYRIGHT PROPERTY OF THE ARCHITECT AND MUST BE RETURNED UPON REQUEST. REPRODUCTION OF DRAWINGS, SPECIFICATIONS AND RELATED DOCUMENTS IN PART OR IN WHOLE IS FORBIDDEN WITHOUT THE ARCHITECT'S WRITTEN PERMISSION.

THESE DRAWINGS ARE FOR PERMIT PURPOSES ONLY. THEY INDICATE DESIGN INTENT ONLY AND DO NOT FULLY DESCRIBE OR SPECIFY ALL CONDITIONS, MATERIAL OR ASSEMBLIES. REQUEST FURTHER INFORMATION FROM ARCHITECT PRIOR TO COMMENCING CONSTRUCTION AS REQUIRED.

ARCHITECT:
CARTER AI
DAVID CARTER ARCHITECTS INC.
688 Richmond St W, Suite 303 Toronto ON M6J 1C5 | 416 977 6300

MECHANICAL AND ELECTRICAL ENGINEERING:
QUASAR
250 Rowntree Dairy Road Woodbridge, ON L4L 9J7

CLIENT:
COLLINGWOOD G&M HOSPITAL

NUCLEAR MEDICINE
SPECT/CT CAMERA
COLLINGWOOD GENERAL AND MARINE HOSPITAL
459 HUME STREET, COLLINGWOOD ON

PROJECT NORTH
TRUE NORTH

POWER & SYSTEM - DEMO

ENTERED: JM
CHECKED: JE
DATE: 2025/12/09
PROJECT NO. HC-24-173

DRAWING NO. E301

GENERAL SHEET NOTES

1. IN EVERY INSTANCE WHERE IT IS REQUIRED IN THE SPECIFICATION OR ON DRAWING THAT EQUIPMENT AND MATERIALS BE REMOVED FROM EXISTING LOCATIONS AND RE-INSTALLED, EITHER IN WHOLE OR IN PART IN NEW LOCATIONS, ALL SUCH EQUIPMENT AND MATERIALS SHALL BE THOROUGHLY CLEANED AND WHERE NECESSARY PUT INTO GOOD OPERATING CONDITION BEFORE BEING RE-INSTALLED IN THE NEW LOCATION. TEST ALL PARTS OF THE RE-USED OR RELOCATED ELECTRICAL EQUIPMENT AND CORRECT ALL FAULTS AND GROUNDS.
2. ALL OPENINGS IN BUILDING RISER, IF APPLICABLE, SHALL BE SEALED WITH APPROVED FIRE STOP MATERIAL. ANY FIREPROOFING MATERIAL REMOVED WILL BE REPLACED WITH A SUITABLE AND APPROVED FIREPROOFING MATERIAL AND SHALL BE INSTALLED AS PER MANUFACTURER'S RECOMMENDATIONS TO APPLICABLE BUILDING AND FIRE CODES.
3. CONTRACTOR TO CONDUCT OWN SURVEY AND VERIFY EXISTING CONDITIONS.
4. COORDINATE WITH THE CLIENT TO CONFIRM EQUIPMENT OR SYSTEMS/DEVICES TO REMAIN.
5. CONTRACTOR SHALL BE RESPONSIBLE FOR ALL REFINISHING OF DAMAGED BUILDING AREAS AND FINISHES AFFECTED BY THE WORK AS OUTLINED UNDER SCOPE OF WORK OF THIS PROJECT.
6. ALL INSTALLATIONS WITHIN EXISTING AREAS SHALL BE COORDINATED WITH OWNER AND BASE BUILDING MANAGEMENT. INSTALLATION MUST BE PERFORMED IN A MANNER TO ELIMINATE ANY INTERFERENCES TO STAFF AND NORMAL OPERATION OF THE FACILITY.
7. THE CONTRACTOR IS RESPONSIBLE FOR THE INSTALLATION AND DISTRIBUTION OF TEMPORARY POWER AND LIGHTING WITHIN THE PREMISES DURING THE CONSTRUCTION PERIOD. EXPOSED ELECTRICAL CORDS OUTSIDE THE AREA OF WORK SHALL NOT BE PERMITTED.
8. CONTRACTOR SHALL BE RESPONSIBLE FOR COORDINATION OF ALL THE WORK WITH ALL OTHER TRADES, CONSULTANTS, AND THE OWNER. ALL WORK SHALL BE SCHEDULED AND CARRIED OUT BY THE CONTRACTOR IN A MANNER TO ENSURE CONTINUED AND NON-INTERRUPTED OPERATION OF EXISTING FACILITY.
9. CONTRACTOR SHALL IDENTIFY AND LABEL CLEARLY ALL CIRCUITS, WIRING, SERVICES, JUNCTION BOXES, PULLBOXES, DATA DROPS, DEVICES AND EQUIPMENT INSTALLED AND CONNECTED UNDER SCOPE OF WORK OF THIS PROJECT. IDENTIFICATION SHALL BE AS PER OWNER'S REQUIREMENTS AND ALL MARKINGS SHALL BE OF NON-ERASABLE LAMACOID TYPE. COORDINATE ALL LABELING WITH THE OWNER AND CONSULTANT.
10. CONTRACTOR TO ENSURE ANY DAMAGE TO EXISTING ELECTRICAL CONDUIT AND CONNECTION TO BE REPLACED OR FIXED PRIOR TO RE-INSTALLATION.
11. CONTRACTOR TO NOTIFY OWNER OF ANY EXISTING DAMAGES PRIOR TO COMMENCING OF WORK. ALL EXISTING EQUIPMENT AND FIXTURES INSIDE THE AREA OF WORK IS TO BE THOROUGHLY INSPECTED, ANY COMPROMISE TO THE INTEGRITY SHOULD BE MADE KNOWN TO THE OWNER.
12. CONTRACTOR TO TRACK AND CONFIRM LOCATION OF FEEDER AND BREAKER TO SOURCE PRIOR TO DISCONNECTION, AND ENSURE BREAKER IS SECURELY TURNED OFF AND LOCKED.
13. WHEREVER POSSIBLE, REUSE EXISTING CIRCUITS MADE AVAILABLE DURING DEMOLITION PHASE. WHERE NEEDED PROVIDE AND INSTALL NEW COMPATIBLE BREAKERS AND WIRING. CONTRACTOR TO VERIFY AVAILABLE CIRCUITS ON SITE, AS PANEL BOARD SCHEDULES MAY NOT BE UP TO DATE

SHEET KEYNOTES

1. PROVIDE AND INSTALL BARRIER FREE PROVISIONS AS OUTLINE ON BARRIER FREE WASH ROOM DETAIL.
2. WORK IN THIS AREA TO BE DEMOLISHED AND RENOVATED FIRST IN ORDER TO RETURN THE SPACE TO FULL USE AS SOON AS POSSIBLE.
3. RETAIN EXISTING CIRCUITS (CONDUIT AND FEEDER) TO SERVE NEW LIGHTING. ELECTRICAL CONTRACTOR TO PRICE FOR ANY MODIFICATION TO EXISTING CONDUIT AND FEEDER.

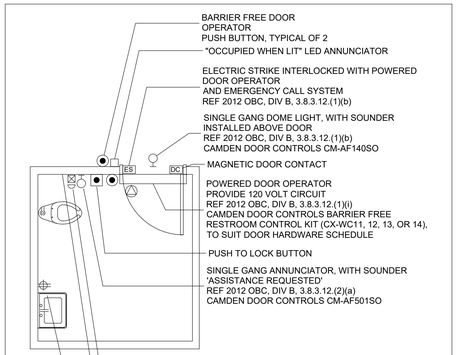

UNIVERSAL RESTROOM "EMERGENCY ASSISTANCE" SIGNAL ACTIVATION, ANNUNCIATION AND SUPPORTING SIGNAGE SHALL BE CAMDEN DOOR CONTROLS MODEL CX/WEC10/CX-WEC-11 UNIVERSAL RESTROOM CONTROL KIT.

KIT SHALL INCLUDE:
1. CM-4050R/12 SINGLE GANG MUSHROOM PUSH BUTTON, 1/4" THICK BRUSHED ALUMINUM FACEPLATE AND RED BUTTON, MAINTAINED PUSH/PULL OPERATION WITH "PRESS FOR EMERGENCY ASSISTANCE" PERMANENTLY LASER ETCHED ON THE FACEPLATE.
2. CM-AF50SO SINGLE GANG LED ANNUNCIATOR WITH SOUNDER, RATED 85 dB AT 100 mm, WEATHER AND VANDAL RESISTANT CONSTRUCTION, BRUSHED STAINLESS STEEL FACEPLATE, WITH "ASSISTANCE REQUIRED" MESSAGE TEXT, THAT IS NOT LEGIBLE UNLESS THE ANNUNCIATOR IS ENERGIZED.
3. CM-AF140SO SINGLE GANG DOME LIGHT WITH PIEZO SOUNDER, RATED 93 dB AT 1 METRE, BRUSHED STAINLESS STEEL FACEPLATE AND 24 V INCANDESCENT BULB.
4. CM-SE21 SIGN, TO BE LOCATED ABOVE THE ACTIVATION SWITCH, 1.6 mm (1/16"), 381 mm BY 381 mm (15" BY 15"), FIRE RATED EXPANDED PVC WHITE, WITH 25 mm BLACK LETTERING. TEXT SHALL BE: "IN THE EVENT OF AN EMERGENCY PUSH EMERGENCY BUTTON AND AUDIBLE AND VISUAL SIGNAL WILL ACTIVATE".
5. INTERCONNECTED WITH DOOR HARDWARE, INCLUDING DOOR OPERATOR, PUSH TO LOCK BUTTON, ELECTRIC STRIKE, DOOR CONTACT.

NOTES:
1. CONFIRM EXACT HARDWARE AND ROUGH-IN REQUIREMENTS WITH EMERGENCY CALL SYSTEM VENDOR.
2. CONFIRM EXACT EQUIPMENT LOCATIONS WITH ARCHITECTURAL DRAWINGS PRIOR TO ROUGH-IN.

1 / E-302 BARRIER FREE WASHROOM DETAIL
N.T.S.

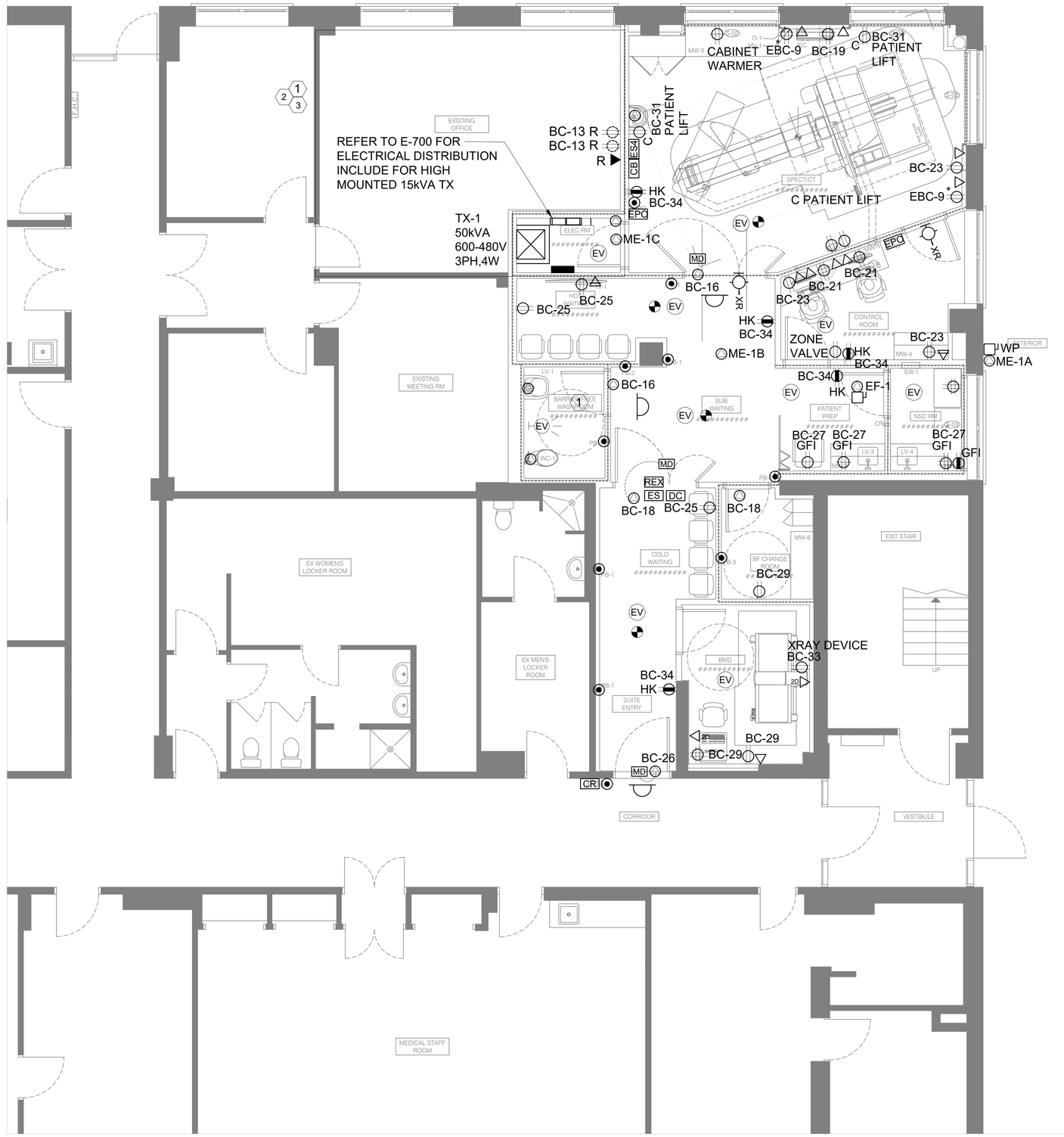

1 / E302 POWER & SYSTEM - NEW WORK
SCALE: 1/4" = 1'-0"

NO.	DATE	ISSUED
04	2026/01/06	ISSUED FOR TENDER
03	2025/12/09	ISSUED FOR PERMIT
02	2025/10/15	ISSUED FOR 50% CD
01	2025/06/17	ISSUED FOR 100% DD

NOTES

CONTRACTOR MUST CHECK AND VERIFY ALL DIMENSIONS SHOWN ON DRAWINGS WITH SITE CONDITIONS, PRIOR TO THE WORK AND NOTIFY THE ARCHITECT OF DIFFERENCES. AWAIT CLARIFICATION BEFORE CONTINUING.

DO NOT SCALE DRAWINGS.

ALL DRAWINGS, SPECIFICATIONS AND RELATED DOCUMENTS ARE THE COPYRIGHT PROPERTY OF THE ARCHITECT AND MUST BE RETURNED UPON REQUEST. REPRODUCTION OF DRAWINGS, SPECIFICATIONS AND RELATED DOCUMENTS IN PART OR IN WHOLE IS FORBIDDEN WITHOUT THE ARCHITECT'S WRITTEN PERMISSION.

THESE DRAWINGS ARE FOR PERMIT PURPOSES ONLY. THEY INDICATE DESIGN INTENT ONLY AND DO NOT FULLY DESCRIBE OR SPECIFY ALL CONDITIONS, MATERIAL OR ASSEMBLIES. REQUEST FURTHER INFORMATION FROM ARCHITECT PRIOR TO COMMENCING CONSTRUCTION AS REQUIRED.

ARCHITECT:
CARTER AI
DAVID CARTER ARCHITECTS INC.
688 Richmond St W, Suite 303 Toronto ON M6J 1C5 | 416 977 6300

MECHANICAL AND ELECTRICAL ENGINEERING:
QUASAR
250 Rowntree Dairy Road Woodbridge, ON L4L 9J7

CLIENT:
COLLINGWOOD G&M HOSPITAL

NUCLEAR MEDICINE SPECT/CT CAMERA

COLLINGWOOD GENERAL AND MARINE HOSPITAL

459 HUME STREET, COLLINGWOOD ON

PROJECT NORTH

TRUE NORTH

POWER & SYSTEM - NEW

ENTERED:	JM
CHECKED:	JE
DATE:	2025/12/09
PROJECT NO.	HC-24-173
DRAWING NO.	E302

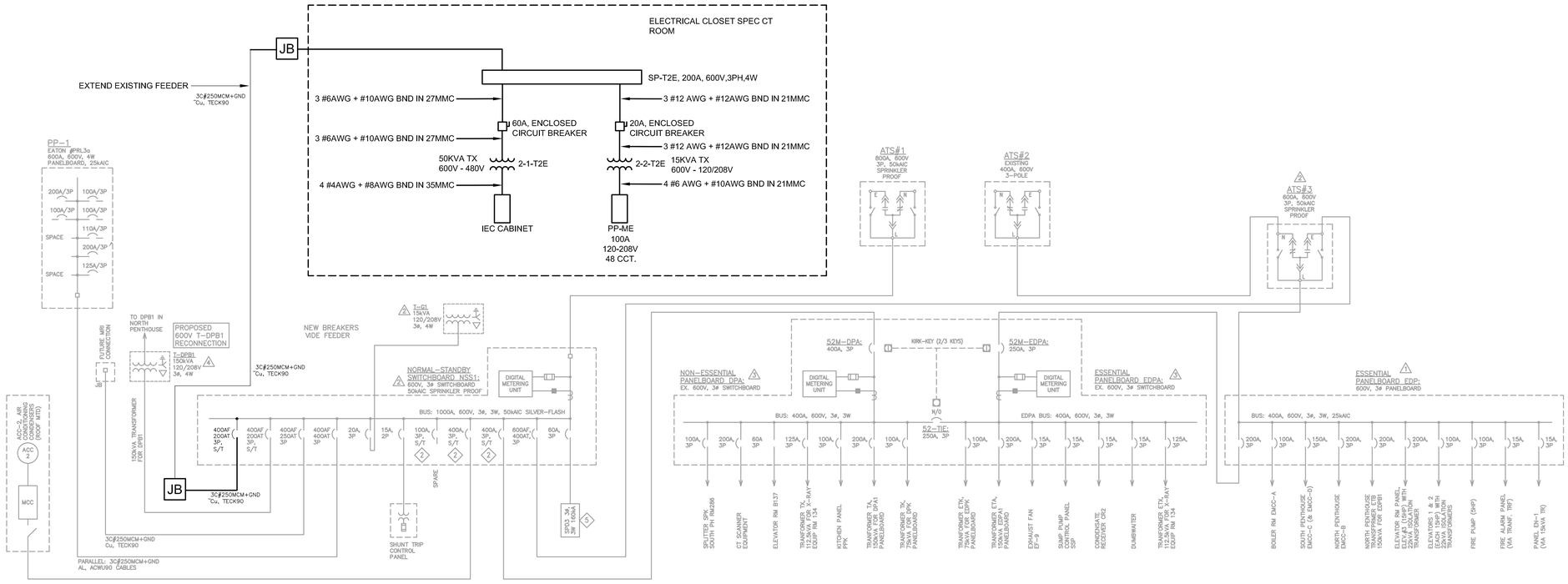

NO.	DATE	ISSUED
04	2026/01/06	ISSUED FOR TENDER
03	2025/12/09	ISSUED FOR PERMIT
02	2025/10/15	ISSUED FOR 50% CD
01	2025/06/17	ISSUED FOR 100% DD

NOTES

CONTRACTOR MUST CHECK AND VERIFY ALL DIMENSIONS SHOWN ON DRAWINGS WITH SITE CONDITIONS, PRIOR TO THE WORK AND NOTIFY THE ARCHITECT OF DIFFERENCES. AWAIT CLARIFICATION BEFORE CONTINUING.

DO NOT SCALE DRAWINGS.

ALL DRAWINGS, SPECIFICATIONS AND RELATED DOCUMENTS ARE THE COPYRIGHT PROPERTY OF THE ARCHITECT AND MUST BE RETURNED UPON REQUEST. REPRODUCTION OF DRAWINGS, SPECIFICATIONS AND RELATED DOCUMENTS IN PART OR IN WHOLE IS FORBIDDEN WITHOUT THE ARCHITECT'S WRITTEN PERMISSION.

THESE DRAWINGS ARE FOR PERMIT PURPOSES ONLY. THEY INDICATE DESIGN INTENT ONLY AND DO NOT FULLY DESCRIBE OR SPECIFY ALL CONDITIONS, MATERIAL OR ASSEMBLIES. REQUEST FURTHER INFORMATION FROM ARCHITECT PRIOR TO COMMENCING CONSTRUCTION AS REQUIRED.

ARCHITECT:
CARTER AI
DAVID CARTER ARCHITECTS INC.
688 Richmond St W, Suite 303 Toronto ON M6J 1C5 | 416 977 6300

MECHANICAL AND ELECTRICAL ENGINEERING:
QUASAR
250 Rowntree Dairy Road Woodbridge, ON L4L 9J7

CLIENT:
COLLINGWOOD G&M HOSPITAL

NUCLEAR MEDICINE
SPECT/CT CAMERA
COLLINGWOOD GENERAL AND MARINE HOSPITAL
459 HUME STREET, COLLINGWOOD ON

PROJECT NORTH
TRUE NORTH

SINGLE LINE DIAGRAM

ENTERED: JM
CHECKED: JE
DATE: 2025/12/09
PROJECT NO.
HC-24-173

DRAWING NO.
E700

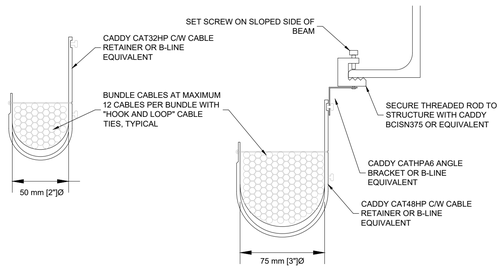

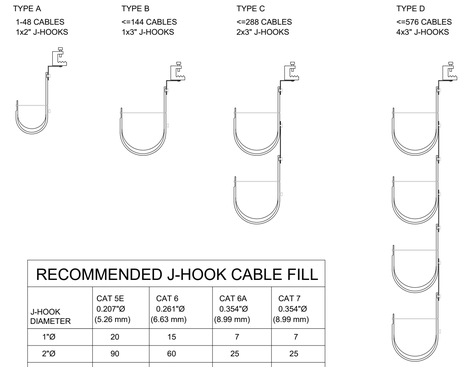

RECOMMENDED J-HOOK CABLE FILL

J-HOOK DIAMETER	CAT 5E 0.207"Ø (5.26 mm)	CAT 6 0.261"Ø (6.63 mm)	CAT 6A 0.354"Ø (8.99 mm)	CAT 7 0.354"Ø (8.99 mm)
1"Ø	20	15	7	7
2"Ø	90	60	25	25
3"Ø	200	150	60	60
4"Ø	330	220	100	100

NOTES:
1. VERIFY EXACT CABLE DIAMETER PRIOR TO INSTALLATION.
2. MAXIMUM SPACING BETWEEN J-HOOKS TO BE 5'-0".

5 / E-800 J-HOOK HORIZONTAL CABLING SUPPORT (FOR REFERENCE)
N.T.S.

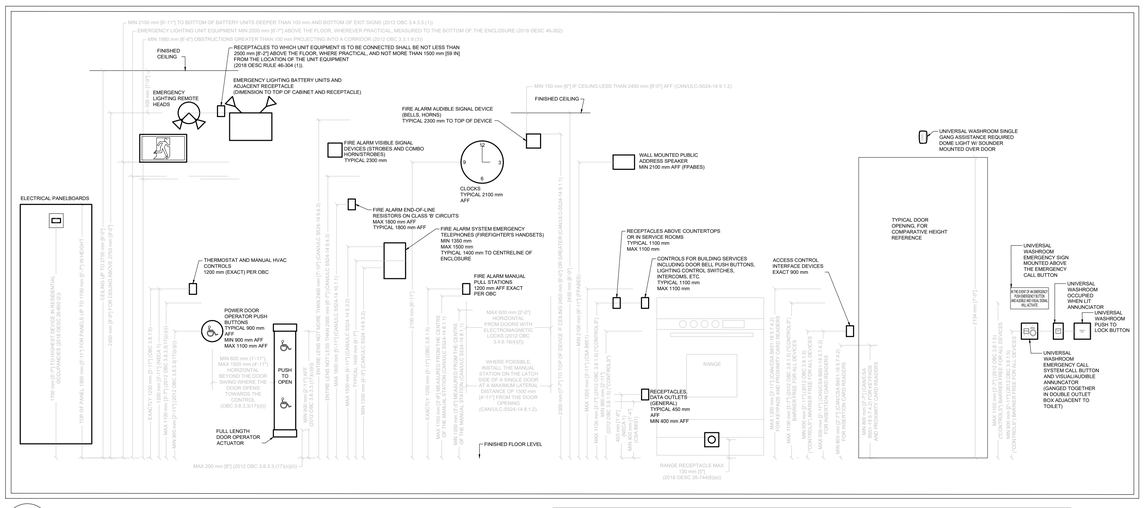

6 / E-800 TYPICAL MOUNTING DETAILS (FOR REFERENCE)
N.T.S.

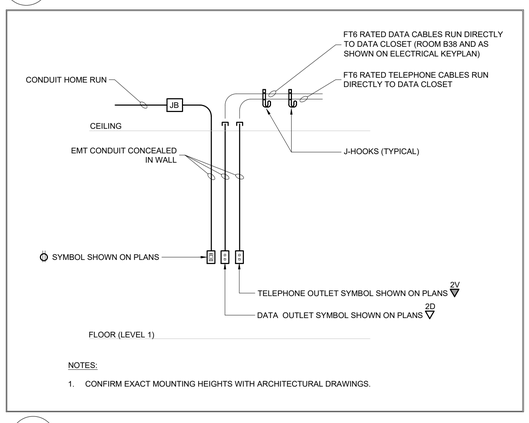

NOTES:
1. CONFIRM EXACT MOUNTING HEIGHTS WITH ARCHITECTURAL DRAWINGS.

8 / E-800 TYP. WIRING DETAIL 2 (FOR REFERENCE ONLY)
N.T.S.

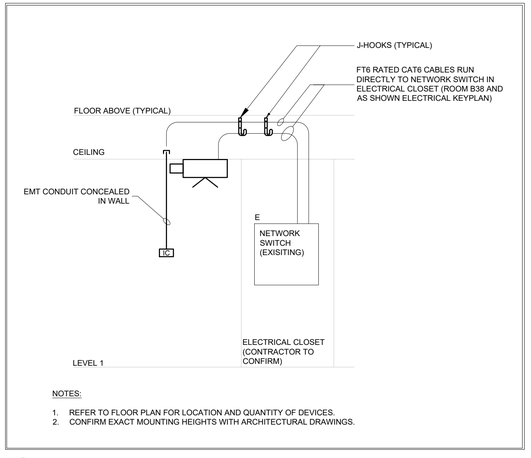

NOTES:
1. REFER TO FLOOR PLAN FOR LOCATION AND QUANTITY OF DEVICES.
2. CONFIRM EXACT MOUNTING HEIGHTS WITH ARCHITECTURAL DRAWINGS.

2 / E-800 CCTV - DETAIL (FOR REFERENCE ONLY)
N.T.S.

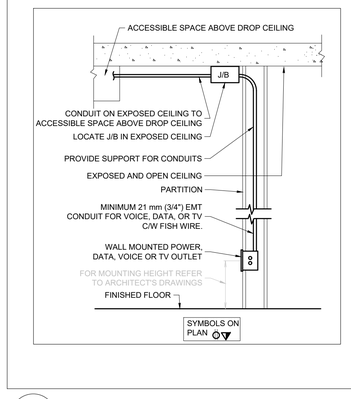

4 / E-800 TYP. WIRING DETAIL 1 (FOR REFERENCE ONLY)
N.T.S.

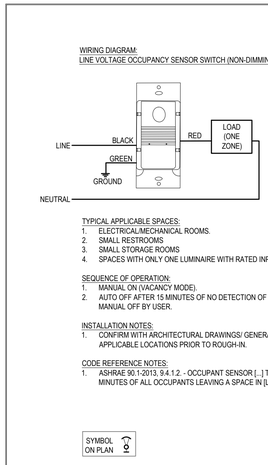

1 / E-800 TYP. OCCUPANCY SENSOR SWITCH(FOR REFERENCE ONLY)
N.T.S.

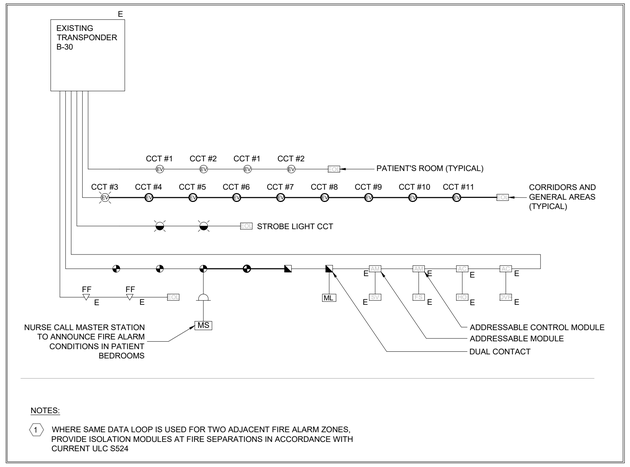

NOTES:
1. WHERE SAME DATA LOOP IS USED FOR TWO ADJACENT FIRE ALARM ZONES, PROVIDE ISOLATION MODULES AT FIRE SEPARATIONS IN ACCORDANCE WITH CURRENT ULC S524

3 / E-800 FIRE ALARM WIRING DIAGRAM - TYPICAL (FOR REFERENCE)
N.T.S.

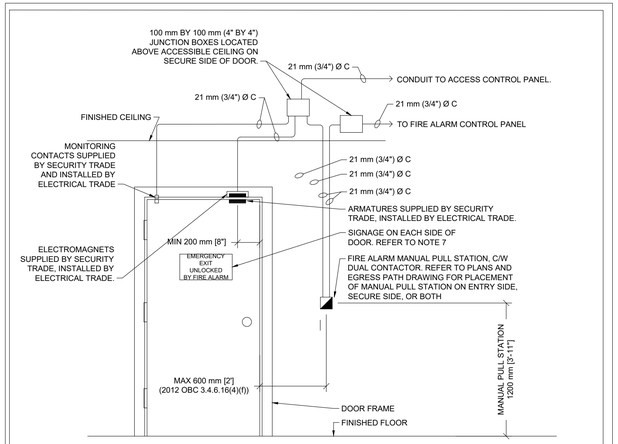

DETAIL NOTES:
1. ALL CONDUITS MINIMUM 21 mm (3/4") UNLESS NOTED OTHERWISE. PROVIDE PULL STRINGS IN ALL CONDUITS FOR SECURITY CONTRACTOR.
2. CONFIRM EXACT REQUIREMENTS WITH SECURITY CONTRACTOR PRIOR TO START OF ROUGH-IN INSTALLATION.
3. OUTLET BOXES AND CONDUIT ROUGH-INS FOR ACCESS CONTROL DEVICES TO BE PROVIDED BY ELECTRICAL TRADE.
4. ALL EXPOSED DEVICES OR WIRES TO BE MOUNTED INSIDE SECURE AREA.
5. PROVIDE EMERGENCY LIGHTS ON BOTH SIDES OF DOOR WITH ELECTROMAGNETIC LOCKS (REF 2012 OBC 3.4.6.16(4)(k)).
6. METRIC DIMENSIONS GOVERN.
7. PROVIDE A LEGIBLE SIGN PERMANENTLY MOUNTED ON EACH SIDE OF THE DOOR HAVING THE WORDS "EMERGENCY EXIT UNLOCKED BY FIRE ALARM". (2012 OBC 3.4.6.16(4)(g)).

MAGLOCK DEVICE EMERGENCY SEQUENCE OF OPERATION:

REF 2012 OBC 3.4.6.16(4):
b. MAGLOCKS TO RELEASE IMMEDIATELY UPON ACTIVATION OF THE ALARM SIGNAL FROM THE FIRE ALARM SYSTEM.
c. THE LOCKING DEVICE RELEASES IMMEDIATELY UPON LOSS OF POWER TO THE FIRE ALARM CONTROL PANEL, OR LOSS OF POWER CONTROLLING THE ELECTROMAGNETIC LOCKING MECHANISM AND ITS AUXILIARY CONTROLS
d. THE LOCKING DEVICE RELEASES IMMEDIATELY UPON ACTUATION OF A MANUALLY OPERATED SWITCH EASILY ACCESSIBLE ONLY TO AUTHORIZED PERSONNEL AND LOCATED NEAR THE MAIN ENTRANCE OF THE BUILDING.
e. THE LOCKING DEVICE RELEASES IMMEDIATELY UPON A FAULT BEING DETECTED IN THE ELECTRICAL CIRCUIT BETWEEN THE FIRE ALARM CONTROL PANEL AND THE CONTROLLER OF THE LOCKING DEVICE.
f. THE LOCKING DEVICE RELEASES IMMEDIATELY UPON THE OPERATION OF A MANUAL PULL STATION FOR THE FIRE ALARM SYSTEM LOCATED ON THE WALL NOT MORE THAN 600 MM FROM THE DOOR.
i. UPON RELEASE, THE LOCKING DEVICE MUST BE RESET MANUALLY BY THE ACTUATION OF THE MANUALLY OPERATED SWITCH.
j. THE OPERATION OF ANY BYPASS SWITCH, WHERE PROVIDED FOR TESTING OF THE FIRE ALARM SYSTEM, CAUSES AN AUDIBLE SIGNAL AND A VISUAL SIGNAL TO BE INDICATED AT THE FIRE ALARM ANNUNCIATOR PANEL AND AT THE MONITORING STATION.

7 / E-800 MAGLOCK ACCESS CONTROL DETAILS (FOR REFERENCE)
N.T.S.

NO.	DATE	ISSUED
04	2026/01/06	ISSUED FOR TENDER
03	2025/12/09	ISSUED FOR PERMIT
02	2025/10/15	ISSUED FOR 50% CD
01	2025/06/17	ISSUED FOR 100% DD

NOTES

CONTRACTOR MUST CHECK AND VERIFY ALL DIMENSIONS SHOWN ON DRAWINGS WITH SITE CONDITIONS, PRIOR TO THE WORK AND NOTIFY THE ARCHITECT OF DIFFERENCES. AWAIT CLARIFICATION BEFORE CONTINUING.

DO NOT SCALE DRAWINGS.

ALL DRAWINGS, SPECIFICATIONS AND RELATED DOCUMENTS ARE THE COPYRIGHT PROPERTY OF THE ARCHITECT AND MUST BE RETURNED UPON REQUEST. REPRODUCTION OF DRAWINGS, SPECIFICATIONS AND RELATED DOCUMENTS IN PART OR IN WHOLE IS FORBIDDEN WITHOUT THE ARCHITECT'S WRITTEN PERMISSION.

THESE DRAWINGS ARE FOR PERMIT PURPOSES ONLY. THEY INDICATE DESIGN INTENT ONLY AND DO NOT FULLY DESCRIBE OR SPECIFY ALL CONDITIONS, MATERIAL OR ASSEMBLIES. REQUEST FURTHER INFORMATION FROM ARCHITECT PRIOR TO COMMENCING CONSTRUCTION AS REQUIRED.

ARCHITECT:
CARTER AI
DAVID CARTER ARCHITECTS INC.
688 Richmond St W, Suite 303 Toronto ON M6J 1C5 | 416 977 6300

MECHANICAL AND ELECTRICAL ENGINEERING:
QUASAR
250 Rowntree Dairy Road Woodbridge, ON L4L 9J7

CLIENT:
COLLINGWOOD G&M HOSPITAL

NUCLEAR MEDICINE SPECT/CT CAMERA

COLLINGWOOD GENERAL AND MARINE HOSPITAL

459 HUME STREET, COLLINGWOOD ON

PROJECT NORTH

ELECTRICAL DETAILS 1 OF 3

ENTERED: JM
CHECKED: JE
DATE: 2025/12/09
PROJECT NO.
HC-24-173

DRAWING NO.
E800

EQUIPMENT DETAILS (n.t.s.)

INTEGRATED ELECTRONICS CABINET (IEC)

NOTE:

- No service space required on sides of cabinet.

- Mounting hardware for Integrated Electronics Cabinet and UPS are not provided. Please have local site structural engineer approve mounting and ensure compliance per local regulations.

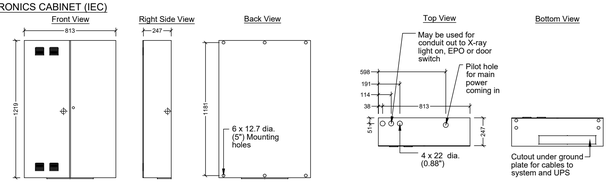

UPS CABINET

NOTE:

UPS weighs 48 kg (106 lbs) and fits inside UPS cabinet. UPS is D130 x H439 x W721 (D5.1" x H17.3" x W28.4").

Front door hinge on the right, UPS cabinet may be rotated and installed 180° from above.

UPS cabinet may need to be off the floor for connection to system.

UPS cabinet is designed to reside under the SIEMENS Integrated Electronics Cabinet.

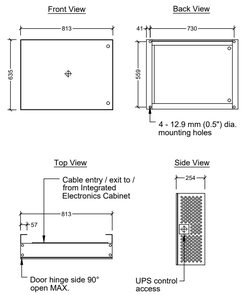

BASE FRAME (IEC/UPS CABINET)

DESIGN PROPOSAL ONLY

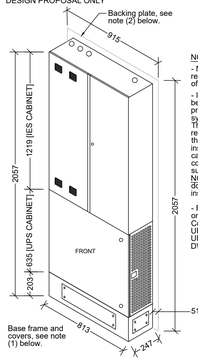

NOTE:

- No service space required on sides of cabinet.

- IEC cabinet will be delivered to site prior to main system delivery. This will be the responsibility of the contractor to install the IEC cabinet and connect the power supply to it. NOTE: Failure to do so will result in installation delays.

- For the location on the electrical Connection Point UPS, behind the UPS cabinet, see DWG 433-018-03.

(1) This proposed base frame may or may not be required depending upon site conditions - contact the SIEMENS Project Manager to confirm.

(2) Contractor to supply / install a 2057 mm high backing at 2160 mm to bottom edge of backing, flush mounted, for wall mounting/anchoring of SIEMENS Electronics Cabinets. Backing must cover the entire width of the electronics cabinet(s) plus min. 50 mm on each side (MIN. 915 mm).

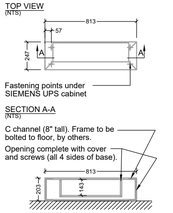

NOTES:
- Frame to be designed by Structural Engineer in order to be a solid and vibration-free mounting for SIEMENS equipment Cabinet.
- Mounting Frame and Floor Fasteners to be supplied by others/customer.

3 / E-801 EQUIPMENT DETAILS
NTS

PROPOSED LAYOUT

1 : 50

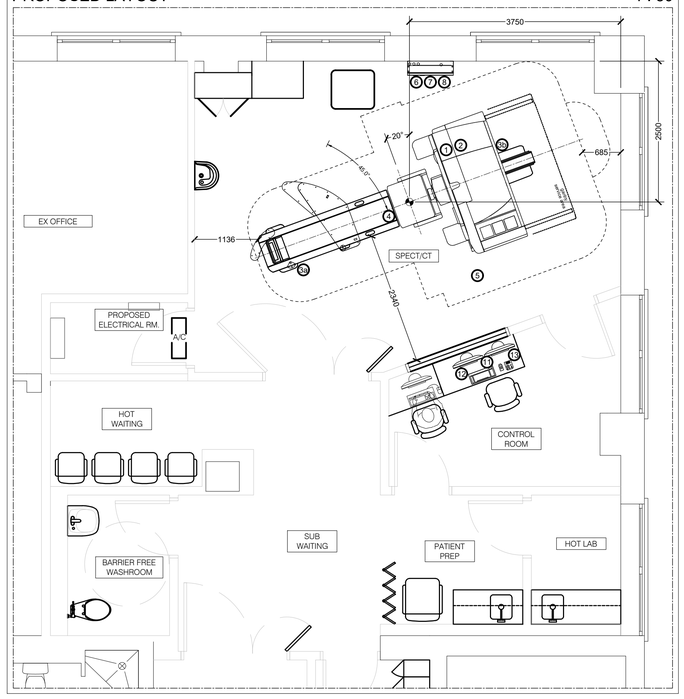

GENERAL ELECTRICAL NOTES:
UNLESS OTHERWISE NOTED ELECTRICAL CONTRACTOR SHALL PROVIDE ALL NECESSARY WIRING, BOXES AND CONDUIT, COMPLETE WITH INSTALLATION PER COORDINATION WITH MANUFACTURER'S REQUIREMENT. IN ANY INSTANCE WHERE THE DETAIL MENTIONS SUPPLIED BY CUSTOMER, ELECTRICAL CONTRACTOR SHALL SUPPLY AND INSTALL PER MANUFACTURER REQUIREMENTS. IN INSTANCES WHERE DETAILS MENTIONS SUPPLIED BY SIEMENS, ELECTRICAL CONTRACTOR SHALL COORDINATE AND INSTALL PER MANUFACTURER REQUIREMENTS.

EQUIPMENT LEGEND - Symbia Pro.specta X3

No	DESIGNATION	HEAT (kW)	WEIGHT (kg)
1	SPECT Gantry (with HE Collimators and CT Gantry)	1.00 (idle)	3710
2	CT Gantry - X3		
3a	Front Patient Bed (PHS)		1061
3b	Rear Patient Bed (PHS) (with covers and SNAC)	6.20 (operation)	183
4	ICC + ACC + AQC (part of front PHS)		125
5	Patient Positioning Monitor (PPM) (above gantry)		7
6	Integrated Electronics Cabinet	0.15	194
7	UPS Cabinet (below IEC)	--	36
8	UPS (in UPS Cabinet)	0.40	48
9	- - - - -	--	--
10	- - - - -	--	--
11	Workplace (keyboard & control box)	0.08	9
12	Workplace (18" flat panel monitor)		14
13	Workplace (18" flat panel monitor)		14

SOME EQUIPMENT SHOWN ON THIS DRAWING MAY BE IDENTIFIED AS OPTIONAL. PLEASE REFER TO QUOTATIONS FOR ACTUAL EQUIPMENT TO BE DELIVERED

NOTE: These drawings reflect the installation requirements for all equipment provided by Siemens. Installation information from the manufacturer, and all resulting design requirements, are the responsibility of the customer/contractor should the customer purchase non-Siemens products or equipment by other means

NOTE: This set of final installation drawings reflects the latest sales configuration (OCF). Any changes to the sales configuration may require a revision to these project drawings. Siemens will produce a revised set of drawings to reflect the change(s), but Siemens will not be responsible for any construction costs associated with the change(s) that occur from this plan modification.

Symbia Recommended Room Height
- Minimum room height for system = 2440 mm
- Minimum room height for system with ceiling mounted injector = 2900 mm.

1 / E-801 PROPOSED LAYOUT
1:50

NO.	DATE	ISSUED
04	2026/01/06	ISSUED FOR TENDER
03	2025/12/09	ISSUED FOR PERMIT
02	2025/10/15	ISSUED FOR 50% CD
01	2025/06/17	ISSUED FOR 100% DD

NOTES

CONTRACTOR MUST CHECK AND VERIFY ALL DIMENSIONS SHOWN ON DRAWINGS WITH SITE CONDITIONS, PRIOR TO THE WORK AND NOTIFY THE ARCHITECT OF DIFFERENCES. AWAIT CLARIFICATION BEFORE CONTINUING.

DO NOT SCALE DRAWINGS.

ALL DRAWINGS, SPECIFICATIONS AND RELATED DOCUMENTS ARE THE COPYRIGHT PROPERTY OF THE ARCHITECT AND MUST BE RETURNED UPON REQUEST. REPRODUCTION OF DRAWINGS, SPECIFICATIONS AND RELATED DOCUMENTS IN PART OR IN WHOLE IS FORBIDDEN WITHOUT THE ARCHITECT'S WRITTEN PERMISSION.

THESE DRAWINGS ARE FOR PERMIT PURPOSES ONLY. THEY INDICATE DESIGN INTENT ONLY AND DO NOT FULLY DESCRIBE OR SPECIFY ALL CONDITIONS, MATERIAL OR ASSEMBLIES. REQUEST FURTHER INFORMATION FROM ARCHITECT PRIOR TO COMMENCING CONSTRUCTION AS REQUIRED.

POWER DISTRIBUTOR LOCALLY SOURCED

FOR SYMBIA Pro.specta Systems

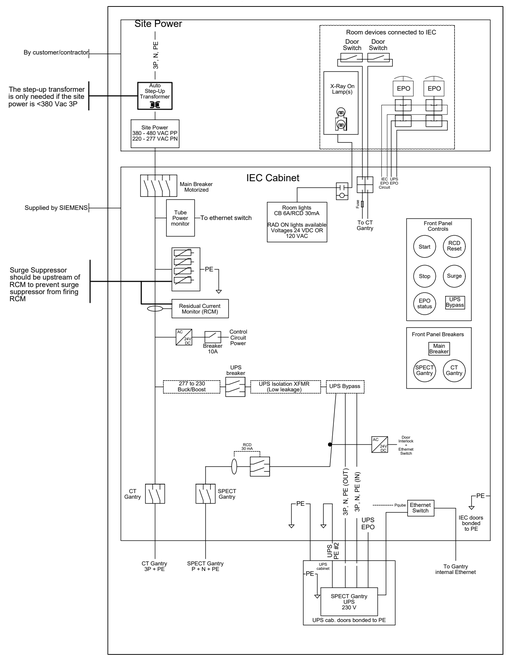

4 / E-801 POWER DISTRIBUTOR LOCALLY SOURCE
NTS

POWER SUPPLY SCHEDULE (SYMBIA Pro.specta X3)

POWER REQUIREMENTS - SYMBIA Pro.specta X3
LINE CONNECTION: ..... 3/N ~ 480V ±10%, 47 - 63 Hz
LINE IMPEDANCE: ..... ≤400 mΩ
POWER CONSUMPTION: ..... Please refer to Power Consumption Chart

POWER CONSUMPTION
PRO. SPECTA Q3 AND X3

The following table shows system power consumption values for exemplary periods (sec.):

Time	System Power Consumption (kVA)	Operating Mode
6 sec.	50	System ON (Operation)
10 sec.	44	
30 sec.	37	
50 sec.	31	
100 sec.	22	
> 100 sec.	3	System ON (Standby)
> 100 sec.	0.15	System OFF (SPECT. Det. Powered)
> 100 sec.	0	System Completely OFF (Not recommended)

CONNECTION VALUE = Nominal line voltage (V) x External line fuse (A) x 1.73

UPS FOR OVERALL SYSTEM: There is no UPS manufacturer recommendation. If a UPS is being for the overall system, please ensure proper power calculation.

MIN. 50 kVA output power

POWER CONSUMPTION OF OVERALL SYSTEM

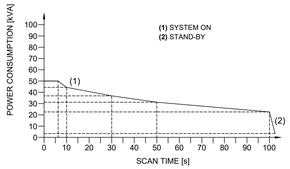

2 / E-801 PROPOSED LAYOUT
NTS

ELECTRICAL NOTES

1 - All wires and multi-conductor cables installed by Electrical contractor shall be standard, flexible and flame seal type, and are to be left with minimum 6'-0" tail at each termination unless otherwise specified.
2 - The electrical contractors shall provide all necessary pull boxes, conduits, raceways, fittings, bushings, cables and other items as per the electrical plan unless otherwise specified.
3 - All cable outlets, pull boxes and raceways described in this drawing as being set flush with finished floor are to be of the waterproof type with gasketted metal covers.
4 - All conduits which are left empty for the cables supplied by SIEMENS shall be provided with Greenlee Conduit Measuring tape (Cat.# N435 or equivalent).
5 - All conduit bends are to have large sweeping radius. Only standard conduit elbows are to be used. Only rigid conduits can be used for the entire conduit run.
6 - All cable ducts shown are to be supplied with a removable cover.
7 - Each conduit termination indicated on the drawing shall be finished with plastic bushing.
8 - Conduits and raceways shown are indicated schematically and are not to be used for actual runs. Contractor is to determine the SHORTEST RUN available prior to installation. Refer to the CABLE SPECIFICATION detail on this sheet.
9 - The electrical work in this installation shall be performed in strict compliance with Canadian Electrical Code, or local Codes, whichever is more stringent.
10 - When installation does not conform with drawing submitted, the SIEMENS Project Manager must be contacted before any design changes may be made.
11 - All slab coring and drilling for raceway installations and final equipment mounting are provided by the Contractor/Customer. These areas shall be scanned using acceptable industry methods.
12 - All dimensions shown are from finished surfaces.
13 - If the Line Impedance specification is not met, the maximum generator output (kW) will not be possible.
14 - The conduit/duct layout as shown considers the mandatory separation of power and signal cables. Any changes to, or consolidation of, conduits/ducts must must be approved by the SIEMENS Project Manager.
15 - ALL WIRES/CONDUCTORS of the POWER SUPPLY MUST be of EQUAL SIZE, regardless of local codes, and supplied BY ELECTRICAL CONTRACTOR. The safety GROUND MUST be ISOLATED, to protect the system from interference. All materials and equipment not by SIEMENS MUST be GROUNDED SEPARATELY. The SIEMENS equipment ground must be continuous, with no breaks or use of conduit,chassis or earth as the sole grounding path.
16 - All power supply requirements are to be designed and/or approved by a Electrical Engineer. SIEMENS recommends the incoming power lines be analyzed for transient surges and impulses, sags and overvoltages.
17 - If shown, cable trays in the access floor space are to be supplied only if required by local Electric Code.

GENERAL NOTES

NOTE: The information contained in this drawing is based on the most current technical information available at the time this drawing was issued. We reserve the right to make changes as dictated by technical product developments.

Connection points that are not dimensioned may be located at the Customer's discretion. The location of these items as shown on this drawing indicate the preferred SIEMENS location only.

ARCHITECT:
CARTER AI
DAVID CARTER ARCHITECTS INC.
688 Richmond St W, Suite 303 Toronto ON M6J 1C5 | 416 977 6300

MECHANICAL AND ELECTRICAL ENGINEERING:
QUASAR
250 Rowntree Dairy Road Woodbridge, ON L4L 9J7

CLIENT:
COLLINGWOOD G&M HOSPITAL

NUCLEAR MEDICINE SPECT/CT CAMERA
COLLINGWOOD GENERAL AND MARINE HOSPITAL
459 HUME STREET, COLLINGWOOD ON

PROJECT NORTH
TRUE NORTH

ELECTRICAL DETAILS 2 OF 3

ENTERED:	JM
CHECKED:	JE
DATE:	2025/12/09
PROJECT NO.	HC-24-173

DRAWING NO. E801

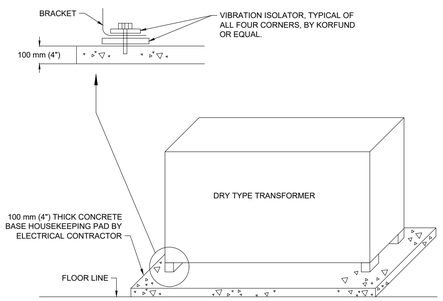

MATERIAL

.1 PORTLAND CEMENT: TO CAN/CSA_A3001, TYPE GU.
.2 WATER: TO CAN/CSA-A23.1.
.3 AGGREGATES: TO CSA-A23.1.
.4 COARSE AGGREGATES TO BE NORMAL DENSITY TO CSA-A23.1/A23.2.
.5 ADMIXTURES:
.1 AIR ENTRAINING ADMIXTURE: TO ASTM C260.
.2 CHEMICAL ADMIXTURES: TO ASTM C494, OWNER'S REPRESENTATIVE TO APPROVE ACCELERATING OR SET RETARDING ADMIXTURES DURING COLD AND HOT WEATHER PLACING.

MIXES

.1 PROPORTION NORMAL DENSITY CONCRETE IN ACCORDANCE WITH CSA-A23.1/A23.2. ALTERNATIVE 1 TO GIVE FOLLOWING QUALITY AND YIELD FOR ALL CONCRETE.
.1 CEMENT:
.1 TYPE GU PORTLAND CEMENT.
.2 MINIMUM COMPRESSIVE STRENGTH AT 28 DAYS: 30 MPA.
.3 MINIMUM CEMENT CONTENT: 300 KG/M3 OF CONCRETE.
.4 CLASS OF EXPOSURE: N.
.5 NOMINAL SIZE OF COARSE AGGREGATE: 20 MM.
.6 SLUMP AT TIME AND POINT OF DISCHARGE: 75 MM TO 100 MM.
.7 AIR CONTENT: 5% TO 8%.
.8 CHEMICAL ADMIXTURES: ADMIXTURES IN ACCORDANCE WITH ASTM C494.

INSTALLATION

.1 DO CAST-IN-PLACE CONCRETE WORK IN ACCORDANCE WITH CSA A23.1 AND CSA A23.2.
.2 ANCHOR BOLTS.
.1 SET ANCHOR BOLTS TO TEMPLATES UNDER SUPERVISION OF APPROPRIATE TRADE PRIOR TO PLACING CONCRETE.
.2 PROTECT ANCHOR BOLT HOLES FROM WATER ACCUMULATIONS
.3 SET BOLTS AND FILL HOLES WITH SHRINKAGE COMPENSATING GROUT.
.3 FINISHING.
.1 FINISH CONCRETE IN ACCORDANCE WITH CSA A23.1 AND CSA A23.2.
.4 CONCRETE SLAB TOLERANCES IN ACCORDANCE WITH CSA-A23.1/A23.2, F-NUMBER METHOD, FF =25, FL = 20.

6 / E-802 TRANSFORMER CONCRETE PAD
NTS

GENERAL ELECTRICAL NOTES:
UNLESS OTHERWISE NOTED ELECTRICAL CONTRACTOR SHALL PROVIDE ALL NECESSARY WIRING, BOXES AND CONDUIT, COMPLETE WITH INSTALLATION PER COORDINATION WITH MANUFACTURER'S REQUIREMENT. IN ANY INSTANCE WHERE THE DETAIL MENTIONS SUPPLIED BY CUSTOMER, ELECTRICAL CONTRACTOR SHALL SUPPLY AND INSTALL PER MANUFACTURER REQUIREMENTS. IN INSTANCES WHERE DETAILS MENTIONS SUPPLIED BY SIEMENS, ELECTRICAL CONTRACTOR SHALL COORDINATE AND INSTALL PER MANUFACTURER REQUIREMENTS.

RACEWAY SCHEDULE

	RUN	DESIGNATION											MOUNTING												SIZE	
		FROM POINT / RUN(R)	TO POINT / RUN(R)	DUCT(CABLE W/RREWAY)	CONDUIT (RIGID CONDUIT ONLY)	TRENCH DUCT(FLOOR FLUSH)	CABLE TRAY	VERTICAL DUCT(V)	CONTAINS POWER SUPPLY CABLES	REMOVEABLE ACCESSIBLE COVER	# OF EQUAL COMPARTMENTS	--	FLUSH FLOOR(F) ACCESS FL(A)	FLUSH WALL(W) CEILING(C)	CEILING SPACE ABOVE	CEILING SPACE BELOW	ACCESS FLOOR SPACE	ABOVE FINISHED FLOOR ℄	SURFACE FL(F) ACCESS FL(A)	SURFACE CEILING(C) WALL(W)	EXISTING	AS SHOWN	WALL SPACE	TO SUIT (BY CONTRACTOR)	SIZE REQUIRED (INTERNAL DIMENSION)
	1A	–	IEC		●				●						●								●	●	SEE ELECTRICAL NOTE 14 &16	
	1b	X2	X1		●				●							●							●	●	Ø2"+ Ø1"	
*1	2	IEC	EPO		●										●								●	●	--	
*2	3	IEC	RI		●										●								●		Ø ½"	
	4	X2	X1		●											●							●		Ø1½"+2"	
	5	CON	X1		●											●							●		Ø3"+ Ø1"	
	6	T1	T2		●											●									Ø 3"	

2 / E-802 RACEWAY SCHEDULE
NTS

CONNECTION POINT SCHEDULE

	POINT	DESIGNATION										MOUNTING									SIZE	
		ON/OFF DISCONNECT	CONTACTOR	EMERGENCY SHUNT TRIP	PULL BOX	ACCESS FLOOR OPENING	SLEEVE TERMINATION	DUCT TERMINATION	CONDUIT TERMINATION	REMOVEABLE COVER	SPLIT REMOVEABLE COVER	DUCT COVER PLATE OPENING	GROMMETED HOLE DIAMETER	FLUSH FLOOR(F) ACCESS FL(A)	FLUSH WALL(W) CEILING(C)	CEILING SPACE ABOVE	CEILING SPACE BELOW	ACCESS FLOOR SPACE	ABOVE FINISHED FLOOR ℄	SURFACE FL(F) ACCESS FL(A)	SURFACE CEILING(C) WALL(W)	BELOW FINISHED CEILING ℄	x THRU COVER WIDTH	TO SUIT (BY CONTRACTOR)	SIZE REQUIRED (INTERNAL DIMENSION)
*3	IEC			●						●				W				78"					●	--
	X1, X2			●													●						●	--
	EPO		●											W				5'					●	--
	JB1					●							F											Ø 4"
*3	UPS					●							F											Ø 4"
	CON			●							●			W				1"					●	--
	T1, T2								●				F											Ø 3"
*2	RI	"RADIATION ON" INDICATOR SIGN, ABOVE EXTERIOR DOOR																		W			●	--

*1 Emergency Shunt Trip (EST) is at the customer's discretion (optional), unless required by local electrical code. All EST devices to be equipped with a hinged plastic clear cover to protect against accidental activations (by others).
*2 SIEMENS provides a floating ground contact: 24V/10A-DC.
*3 For additional information on the IEC/UPS cabinet, see EQUIPMENT DETAILS on DWG 744-015-02.

4 / E-802 CONNECTION POINT SCHEDULE
NTS

RACEWAY LAYOUT 1 : 50

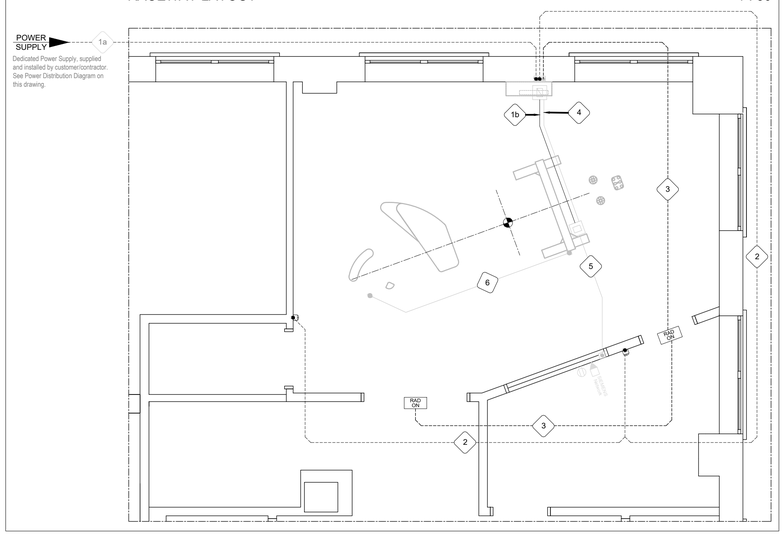

1 / E-802 RACEWAY LAYOUT
1:50

CONNECTION POINT LAYOUT 1 : 50

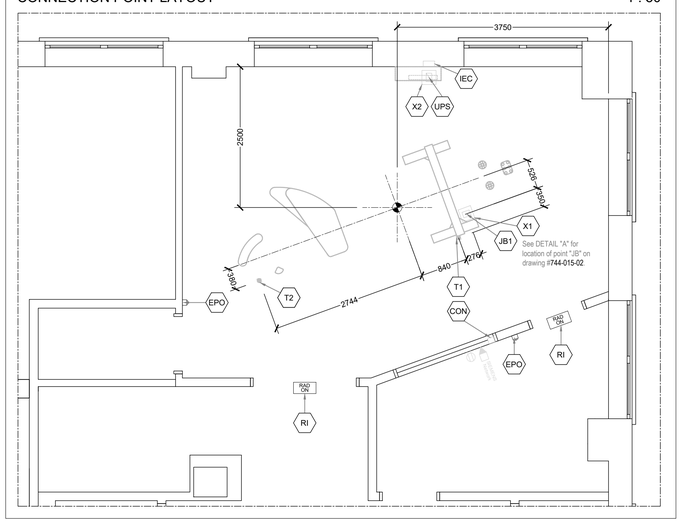

3 / E-802 CONNECTION POINT LAYEROUT
1:50

SCHEMATIC (n.t.s.)

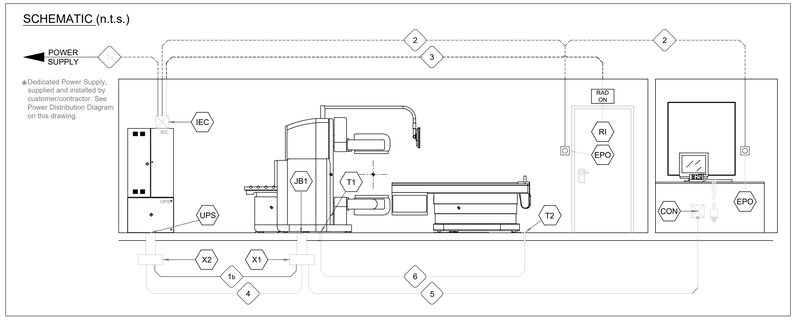

5 / E-802 SCHEMATIC
NTS

NO.	DATE	ISSUED
04	2026/01/06	ISSUED FOR TENDER
03	2025/12/09	ISSUED FOR PERMIT
02	2025/10/15	ISSUED FOR 50% CD
01	2025/06/17	ISSUED FOR 100% DD

NOTES

CONTRACTOR MUST CHECK AND VERIFY ALL DIMENSIONS SHOWN ON DRAWINGS WITH SITE CONDITIONS, PRIOR TO THE WORK AND NOTIFY THE ARCHITECT OF DIFFERENCES. AWAIT CLARIFICATION BEFORE CONTINUING.

DO NOT SCALE DRAWINGS.

ALL DRAWINGS, SPECIFICATIONS AND RELATED DOCUMENTS ARE THE COPYRIGHT PROPERTY OF THE ARCHITECT AND MUST BE RETURNED UPON REQUEST. REPRODUCTION OF DRAWINGS, SPECIFICATIONS AND RELATED DOCUMENTS IN PART OR IN WHOLE IS FORBIDDEN WITHOUT THE ARCHITECT'S WRITTEN PERMISSION.

THESE DRAWINGS ARE FOR PERMIT PURPOSES ONLY. THEY INDICATE DESIGN INTENT ONLY AND DO NOT FULLY DESCRIBE OR SPECIFY ALL CONDITIONS, MATERIAL OR ASSEMBLIES. REQUEST FURTHER INFORMATION FROM ARCHITECT PRIOR TO COMMENCING CONSTRUCTION AS REQUIRED.

ARCHITECT:
CARTER AI
DAVID CARTER ARCHITECTS INC.
688 Richmond St W, Suite 303 Toronto ON M6J 1C5 | 416 977 6300

MECHANICAL AND ELECTRICAL ENGINEERING:
QUASAR
250 Rowntree Dairy Road Woodbridge, ON L4L 9J7

CLIENT:
COLLINGWOOD G&M HOSPITAL

NUCLEAR MEDICINE SPECT/CT CAMERA

COLLINGWOOD GENERAL AND MARINE HOSPITAL

459 HUME STREET, COLLINGWOOD ON

PROJECT NORTH

ELECTRICAL DETAILS 3 OF 3

ENTERED:	JM
CHECKED:	JE
DATE:	2025/12/09
PROJECT NO.	HC-24-173
DRAWING NO.	E802

GENERAL SHEET NOTES

1. IN EVERY INSTANCE WHERE IT IS REQUIRED IN THE SPECIFICATION OR ON DRAWING THAT EQUIPMENT AND MATERIALS BE REMOVED FROM EXISTING LOCATIONS AND RE-INSTALLED, EITHER IN WHOLE OR IN PART IN NEW LOCATIONS, ALL SUCH EQUIPMENT AND MATERIALS SHALL BE THOROUGHLY CLEANED AND WHERE NECESSARY PUT INTO GOOD OPERATING CONDITION BEFORE BEING RE-INSTALLED IN THE NEW LOCATION. TEST ALL PARTS OF THE RE-USED OR RELOCATED ELECTRICAL EQUIPMENT AND CORRECT ALL FAULTS AND GROUNDS.
2. ALL OPENINGS IN BUILDING RISER, IF APPLICABLE, SHALL BE SEALED WITH APPROVED FIRE STOP MATERIAL. ANY FIREPROOFING MATERIAL REMOVED WILL BE REPLACED WITH A SUITABLE AND APPROVED FIREPROOFING MATERIAL AND SHALL BE INSTALLED AS PER MANUFACTURER'S RECOMMENDATIONS TO APPLICABLE BUILDING AND FIRE CODES.
3. CONTRACTOR TO CONDUCT OWN SURVEY AND VERIFY EXISTING CONDITIONS.
4. COORDINATE WITH THE CLIENT TO CONFIRM EQUIPMENT OR SYSTEMS/DEVICES TO REMAIN.
5. CONTRACTOR SHALL BE RESPONSIBLE FOR ALL REFINISHING OF DAMAGED BUILDING AREAS AND FINISHES AFFECTED BY THE WORK AS OUTLINED UNDER SCOPE OF WORK OF THIS PROJECT.
6. ALL INSTALLATIONS WITHIN EXISTING AREAS SHALL BE COORDINATED WITH OWNER AND BASE BUILDING MANAGEMENT. INSTALLATION MUST BE PERFORMED IN A MANNER TO ELIMINATE ANY INTERFERENCES TO STAFF AND NORMAL OPERATION OF THE FACILITY.
7. THE CONTRACTOR IS RESPONSIBLE FOR THE INSTALLATION AND DISTRIBUTION OF TEMPORARY POWER AND LIGHTING WITHIN THE PREMISES DURING THE CONSTRUCTION PERIOD. EXPOSED ELECTRICAL CORDS OUTSIDE THE AREA OF WORK SHALL NOT BE PERMITTED.
8. CONTRACTOR SHALL BE RESPONSIBLE FOR COORDINATION OF ALL THE WORK WITH ALL OTHER TRADES, CONSULTANTS, AND THE OWNER. ALL WORK SHALL BE SCHEDULED AND CARRIED OUT BY THE CONTRACTOR IN A MANNER TO ENSURE CONTINUED AND NON-INTERRUPTED OPERATION OF EXISTING FACILITY.
9. CONTRACTOR SHALL IDENTIFY AND LABEL CLEARLY ALL CIRCUITS, WIRING, SERVICES, JUNCTION BOXES, PULLBOXES, DATA DROPS, DEVICES AND EQUIPMENT INSTALLED AND CONNECTED UNDER SCOPE OF WORK OF THIS PROJECT. IDENTIFICATION SHALL BE AS PER OWNER'S REQUIREMENTS AND ALL MARKINGS SHALL BE OF NON-ERASABLE LAMACOID TYPE. COORDINATE ALL LABELING WITH THE OWNER AND CONSULTANT.
10. CONTRACTOR TO ENSURE ANY DAMAGE TO EXISTING ELECTRICAL CONDUIT AND CONNECTION TO BE REPLACED OR FIXED PRIOR TO RE-INSTALLATION.
11. CONTRACTOR TO NOTIFY OWNER OF ANY EXISTING DAMAGES PRIOR TO COMMENCING OF WORK. ALL EXISTING EQUIPMENT AND FIXTURES INSIDE THE AREA OF WORK IS TO BE THOROUGHLY INSPECTED, ANY COMPROMISE TO THE INTEGRITY SHOULD BE MADE KNOWN TO THE OWNER.
12. CONTRACTOR TO TRACK AND CONFIRM LOCATION OF FEEDER AND BREAKER TO SOURCE PRIOR TO DISCONNECTION, AND ENSURE BREAKER IS SECURELY TURNED OFF AND LOCKED.
13. WHEREVER POSSIBLE, REUSE EXISTING CIRCUITS MADE AVAILABLE DURING DEMOLITION PHASE. WHERE NEEDED PROVIDE AND INSTALL NEW COMPATIBLE BREAKERS AND WIRING. CONTRACTOR TO VERIFY AVAILABLE CIRCUITS ON SITE, AS PANEL BOARD SCHEDULES MAY NOT BE UP TO DATE
14.

SHEET KEYNOTES

1. TIE IN NEW EXIT SIGNS WITH EXISTING CIRCUIT FOR EXIT LIGHTS

SCHEDULE 26 06 50.16 - LIGHTING FIXTURE SCHEDULE

SYMBOL	TYPE	DESCRIPTION	BASIS OF DESIGN MANUFACTURER SEE NOTE 1	BASIS OF DESIGN CAT NO. SEE NOTE 1	VOLTAGE	INPUT WATTS	LUMEN PACKAGE (4000 K CCT UNLESS NOTED OTHERWISE) MINIMUM 90 CRI	MOUNTING & ACCESSORIES	REMARKS
	L1	RECESSED 2'X4' LED LUMINAIRE, WHITE FINISH, SUITABLE FOR ACT CEILING. FLAT FROSTED ACRYLIC LENS, 0-10V DIMMING. 90 CRI.	LACH-24G-40-35K-FA		120V			RECESSED	
	L2	RECESSED 1'X4' LED LUMINAIRE, WHITE FINISH, SUITABLE FOR ACT CEILING. FLAT FROSTED ACRYLIC LENS, 0-10V DIMMING.	LACH-14G-40-35K-FA		120V			RECESSED	
	L3	RECESSED 1'X4' LED LUMINAIRE, WHITE FINISH, SUITABLE FOR ACT CEILING. FLAT FROSTED ACRYLIC LENS, 0-10V DIMMING.	LACH-22G-40-35K-FA		120V			RECESSED	
	A1	152.4mm (6" NOMINAL) ROUND APERTURE RECESSED LED DOWNLIGHT C/W 90 CRI, WIDE BEAM DISTRIBUTION AND 0-10V DIMMING FOR ACT TYPE CEILING. WHITE ANTIMICROBIAL POWDER COAT FINISH.	PRESCOLITE LFR-6RD-M -15L - 35K - 8 - WD - DM1 LFR-6RD-T-WD-WC		120V			RECESSED	
	W1	26" LONG LED WALL MOUNTED VANITY LUMINAIRE WITH A ROTATABLE APERTURE WHICH ALLOWS FIELD AIMING TO DIRECT THE LIGHT AT THE TARGET, C/W 0-10V DIMMING. 90 CRI	TERON LIGHTING INC TRN24-L30.0-ZE1000-120-277 TW-30K-EB10		120V			WALL	
	L4	4' LONG SUSPENDED LED WITH V-LINKS FOR MOUNTING CHAIN IN COVE. FLAT FROSTED ACRYLIC LENS AND RIGID ONE-PIECE BODY WITH NARROW DESIGN C/W ROW MOUNTING.	COLUMBIA LIGHTING MPS-4-35K-XL--F-W-E		120V			SUSPENDED	

LIGHTING FIXTURE SCHEDULE NOTES:
1. UNLESS NOTED OTHERWISE, NO ALTERNATE MANUFACTURES AND SUPPLIERS.
2. WHERE AN INCOMPLETE MODEL/CAT NO. IS LISTED, MANUFACTURERS/SUPPLIERS MUST CONFIRM THE PROPOSED FIXTURE WITH THE CONSULTANT A MINIMUM OF ONE WEEK PRIOR TO TENDER CLOSE.
3. SUBMIT SHOP DRAWINGS FOR CONSULTANT'S REVIEW PRIOR TO PLACING ANY ORDER.

SCHEDULE 26 06 50.19 - EMERGENCY LIGHTING AND EXIT SIGN SCHEDULE

SYMBOL	TYPE	DESCRIPTION	MANUFACTURER AND PRODUCT SERIES	VOLTAGE	LAMPS	MOUNTING	SPEC SECTION
	X1	[PLASTIC PICTOGRAM] EXIT SIGN, UNIVERSAL MOUNTING, FACTORY WHITE FINISH.	-LUMACELL LP SERIES -STANPRO RMPN SERIES	SEE NOTE 2	3W LED	CEILING OR WALL, SURFACE	26 52 13.16
	X2	SAME AS X1, DOUBLE FACE	-LUMACELL LP SERIES -STANPRO RMPN SERIES	SEE NOTE 2	3W LED	CEILING OR WALL, SURFACE	26 52 13.16

EMERGENCY LIGHTING FIXTURE & EXIT SIGN SCHEDULE NOTES:
1. WHERE AN INCOMPLETE MODEL/CAT NO. IS LISTED, MANUFACTURERS/SUPPLIES MUST CONFIRM THE PROPOSED FIXTURE WITH THE CONSULTANT A MINIMUM OF ONE WEEK PRIOR TO TENDER CLOSE.
2. EXIT SIGNS SHALL BE CAPABLE OF UNIVERSAL 120/347V AC AND 6 TO 48V DC INPUT. BATTERY UNITS SHALL BE CAPABLE OF UNIVERSAL 120/347V AC INPUT.
3. FOR EXIT SIGNS, REFER TO ARROWS AND NUMBER OF SHADED FACES AS DIRECTED ON LIGHTING LAYOUT. WHERE ARROWS INDICATE TWO DIRECTIONS, PROVIDE TWO PICTOGRAM STYLE EXIT SIGNS.
4. SUBMIT SHOP DRAWINGS FOR CONSULTANT'S REVIEW PRIOR TO PLACING ANY ORDER.
5. MANUFACTURERS AS NOTED IN SECTION 26 52 13.13 AND SECTION 26 52 13.16. [OR]
5. MANUFACTURERS: AIMLITE, BEGHELLI, EMERGILITE, LITHONIA, LUMACELL, STANPRO.
6. REMOTE HEADS CERTIFIED TO CSA C22.2 No. 141.
7. CBCB - "CENTRE BEAM CANDLE POWER."
8. CONFIRM RECOMMENDED SPACING WITH EMERGENCY LIGHTING MANUFACTURER PRIOR TO START OF ROUGH-IN.
9. WHERE AN EXIT SIGN IS TO BE INSTALLED IN AN AREA WITH NO CEILING, PROVIDE SUITABLE PENDANT MOUNT SUCH THAT THE SIGN IS VISIBLE AND NOT OBSCURED.

LIGHTING CONTROL DEVICE SCHEDULE

SYMBOL	DESCRIPTION	BASIS OF DESIGN MANUFACTURERS AND PRODUCT SERIES	CONTROL WIRING
LVR	ON/OFF WALL STATION, SINGLE SWITCH, CONNECTED TO POWER PACK WITH STAINLESS STEEL COVER PLATE	LUTRON	RJ45, CAT 6

LIGHTING CONTROLS SCHEDULE NOTES:

1. LIGHTING CONTROLS OF ONE MANUFACTURER THROUGH PROJECT TO ENSURE PRODUCT COMPATIBILITY.
2. SHN LIGHTING AND CONTROLS DESIGN STANDARD ALLOWS ONLY LUTRON COMPATIBLE DEVICES.
3. DUAL TECHNOLOGY SENSORS: PASSIVE INFRARED/ULTRASONIC, OR PASSIVE INFRARED/MICROPHONIC, DEPENDING ON MANUFACTURER. MICROPHONIC SENSORS ACCEPTABLE IN LIEU OF ULTRASONIC.
4. POSITION CEILING MOUNTED OCCUPANCY SENSORS A MINIMUM 1200 mm (4'-0") FROM NEAREST AIR DIFFUSER, HVAC OUTLETS, HEATING BLOWERS, ETC.
5. CONFIRM INSTALLATION REQUIREMENTS, WIRING DIAGRAMS, ETC. WITH MANUFACTURER'S DETAILS.
6. SUBMIT SHOP DRAWINGS FOR CONSULTANT'S REVIEW PRIOR TO PLACING ANY ORDER.
7. CONFIRM FINISH COLOUR WITH CONSULTANT DURING SUBMITTAL REVIEW.

NO.	DATE	ISSUED
04	2026/01/06	ISSUED FOR TENDER
03	2025/12/09	ISSUED FOR PERMIT
02	2025/10/15	ISSUED FOR 50% CD
01	2025/06/17	ISSUED FOR 100% DD

NOTES

CONTRACTOR MUST CHECK AND VERIFY ALL DIMENSIONS SHOWN ON DRAWINGS WITH SITE CONDITIONS, PRIOR TO THE WORK AND NOTIFY THE ARCHITECT OF DIFFERENCES. AWAIT CLARIFICATION BEFORE CONTINUING.

DO NOT SCALE DRAWINGS.

ALL DRAWINGS, SPECIFICATIONS AND RELATED DOCUMENTS ARE THE COPYRIGHT PROPERTY OF THE ARCHITECT AND MUST BE RETURNED UPON REQUEST. REPRODUCTION OF DRAWINGS, SPECIFICATIONS AND RELATED DOCUMENTS IN PART OR IN WHOLE IS FORBIDDEN WITHOUT THE ARCHITECT'S WRITTEN PERMISSION.

THESE DRAWINGS ARE FOR PERMIT PURPOSES ONLY. THEY INDICATE DESIGN INTENT ONLY AND DO NOT FULLY DESCRIBE OR SPECIFY ALL CONDITIONS, MATERIAL OR ASSEMBLIES. REQUEST FURTHER INFORMATION FROM ARCHITECT PRIOR TO COMMENCING CONSTRUCTION AS REQUIRED.

ARCHITECT:
CARTER AI
DAVID CARTER ARCHITECTS INC.
688 Richmond St W, Suite 303 Toronto ON M6J 1C5 | 416 977 6300

MECHANICAL AND ELECTRICAL ENGINEERING:
QUASAR
250 Rowntree Dairy Road Woodbridge, ON L4L 9J7

CLIENT:
COLLINGWOOD G&M HOSPITAL

NUCLEAR MEDICINE
SPECT/CT CAMERA
COLLINGWOOD GENERAL AND MARINE HOSPITAL
459 HUME STREET, COLLINGWOOD ON

PROJECT NORTH
TRUE NORTH

ELECTRICAL SCHEDULE

ENTERED: JM
CHECKED: JE
DATE: 2025/12/09
PROJECT NO.
HC-24-173

DRAWING NO.
E900

Branch Panel: EBC

Location: X
Supply From: EDPB1 RM 304
Mounting: Surface
Enclosure:

Volts: 120/208 Wye
Phases: 3
Wires: 4

A.I.C. Rating:
Mains Type:
Mains Rating: 225A
MCB Rating:

Notes:

CKT	Circuit Description	Trip	Poles	A	B	C	Poles	Trip	Circuit Description	CKT
1	RCPT RM B45/B50	15	1				1	15	LGTS RM B43/B46/B48/B49	2
3	RCPT RM B52 (PR)	15	1				1	15	LGTS RM B52 (PR)	4
5	RCPT RM B52/B53 (PR)	15	1				1	15	LGTS RM B58/B59/B60/B61/B62	6
7	RCPT RM B51/B53 (PR)	15	1				1	15	LGTS RM B54/B63 (PR)	8
9	RCPT RM B55/B56 (R)	15	1				1	15	SPARE	10
11	RCPT RM B56/B57 (R)	15	1				1	60	SPARE	12
13	SPACE	--	--				1	15	SPARE	14
15	SPACE	40	1				1	15	SPARE	16
17	SPACE	--	--				1	15	SPARE	18
19	SPACE	--	--				1	15	SPARE	20
21	SPACE	--	--				--	--	SPACE	22
23	SPACE	--	--				--	--	SPACE	24
25	SPACE	--	--				--	--	SPACE	26
27	SPACE	--	--				--	--	SPACE	28
29	SPACE	--	--				--	--	SPACE	30
31	SPACE	--	--				--	--	SPACE	32
33	SPACE	--	--				--	--	SPACE	34
35	SPACE	--	--				--	--	SPACE	36
37	SPACE	--	--				1	15	FAN FORCE HTR RM B149	38
39	SPACE	--	--				1	15	WATER HTR RM B43	40
41	SPACE	--	--				1	15	UNIT HTR RM B43	42
			Total Load:							
			Total Amps:							

Legend: **R - DENOTES DEMOLITION**
PR - DENOTES PARTIAL DEMOLITION

Load Classification	Connected Load	Demand Factor	Estimated Demand	Panel Totals	
				Total Conn. Load:	
				Total Est. Demand:	
				Total Conn.:	
				Total Est. Demand:	

Notes:

Branch Panel: BC

Location: X
Supply From: D0B1 RM 304
Mounting: Surface
Enclosure:

Volts: 120/208 Wye
Phases: 3
Wires: 4

A.I.C. Rating:
Mains Type:
Mains Rating: 225A
MCB Rating:

Notes:

CKT	Circuit Description	Trip	Poles	A	B	C	Poles	Trip	Circuit Description	CKT
1	RCPT RM B44	15	1				1	15	LGTS RM B43/B44/B45	2
3	RCPT RM B45	15	1				1	15	LGTS RM B46/B47/B49	4
5	RCPT RM B47	15	1				1	15	LGTS RM B50/B52 (PR)	6
7	RCPT RM B49/B168	15	1				1	15	LGTS RM B51/B53/B54 (PR)	8
9	RCPT RM B50	15	1				1	15	LGTS RM B55/B56/B57 (R)	10
11	RCPT RM B52 (PR)	15	1				1	15	LGTS RM B58/B62	12
13	RCPT RM B52 (PR)	15	1				1	15	LGTS EXTERIOR	14
15	RCPT RM B51	15	1				1	15	SPARE	16
17	RCPT RM B53	15	1				1	15	SPARE	18
19	ROMP WORKSTATION (R)	15	1				1	15	B59 MICROWAVE	20
21	RCPT RM B54 (R)	15	1				1	15	ROMP OFFICE WORKSTATION	22
23	SPLIT RM B54 (R)	15	1				1	15	HR PLUGS	24
25	RECEPTACLE	15	1				1	15	SPARE	26
27	RCPT RM B54 (R)	15	1				--	--	SPACE	28
29	RCPT RM B54 (R)	15	1				1	15	HES KITCHENETTE	30
31	RCPT RM B55 (R)	15	1				1	15	HIS KITCHENETTE	32
33	RCPT RM B56 (R)	15	1				--	--	SPACE	34
35	RCPT RM B57/B62 (PR)	15	1				1	15	RCPT EXTERIOR	36
37	RCPT RM B62	15	1				1	15	RCPT GFI RM B61	38
39	RCPT RM B66	15	1				1	20	PHOTOCOPY	40
41	RCPT RM B60	15	1				1	15	ROMP PLUG	42
			Total Load:							
			Total Amps:							

Legend: **R - DENOTES DEMOLITION**
PR - DENOTES PARTIAL DEMOLITION

Load Classification	Connected Load	Demand Factor	Estimated Demand	Panel Totals	
				Total Conn. Load:	
				Total Est. Demand:	
				Total Conn.:	
				Total Est. Demand:	

Notes:

NO.	DATE	ISSUED
04	2026/01/06	ISSUED FOR TENDER
03	2025/12/09	ISSUED FOR PERMIT
02	2025/10/15	ISSUED FOR 50% CD
01	2025/06/17	ISSUED FOR 100% DD

NOTES

CONTRACTOR MUST CHECK AND VERIFY ALL DIMENSIONS SHOWN ON DRAWINGS WITH SITE CONDITIONS, PRIOR TO THE WORK AND NOTIFY THE ARCHITECT OF DIFFERENCES. AWAIT CLARIFICATION BEFORE CONTINUING.

DO NOT SCALE DRAWINGS.

ALL DRAWINGS, SPECIFICATIONS AND RELATED DOCUMENTS ARE THE COPYRIGHT PROPERTY OF THE ARCHITECT AND MUST BE RETURNED UPON REQUEST. REPRODUCTION OF DRAWINGS, SPECIFICATIONS AND RELATED DOCUMENTS IN PART OR IN WHOLE IS FORBIDDEN WITHOUT THE ARCHITECT'S WRITTEN PERMISSION.

THESE DRAWINGS ARE FOR PERMIT PURPOSES ONLY. THEY INDICATE DESIGN INTENT ONLY AND DO NOT FULLY DESCRIBE OR SPECIFY ALL CONDITIONS, MATERIAL OR ASSEMBLIES. REQUEST FURTHER INFORMATION FROM ARCHITECT PRIOR TO COMMENCING CONSTRUCTION AS REQUIRED.

ARCHITECT:
CARTER AI
DAVID CARTER ARCHITECTS INC.
688 Richmond St W, Suite 303 Toronto ON M6J 1C5 | 416 977 6300

MECHANICAL AND ELECTRICAL ENGINEERING:
QUASAR
250 Rowntree Dairy Road Woodbridge, ON L4L 9J7

CLIENT:
COLLINGWOOD G&M HOSPITAL

NUCLEAR MEDICINE
SPECT/CT CAMERA
COLLINGWOOD GENERAL AND MARINE HOSPITAL
459 HUME STREET, COLLINGWOOD ON

PROJECT NORTH
TRUE NORTH

ELECTRICAL PANEL
SCHEDULE - DEMO WORK

ENTERED: JM
CHECKED: JE
DATE: 2025/12/09
PROJECT NO.
HC-24-173

DRAWING NO.
E901

Branch Panel: EBC

Location: X
Supply From: EDPB1 RM 304
Mounting: Surface
Enclosure:

Volts: 120/208 Wye
Phases: 3
Wires: 4

A.I.C. Rating:
Mains Type:
Mains Rating: 225A
MCB Rating:

Notes:

CKT	Circuit Description	Trip	Poles	A	B	C	Poles	Trip	Circuit Description	CKT
1	RCPT RM B45/B50	15	1				1	15	LGTS RM B43/B46/B48/B49	2
3	RCPT RM B52 (PR)	15	1				1	15	LGTS RM B52 & SPECT/CT (PR/N)	4
5	RCPT RM B52/B53 (PR)	15	1				1	15	LGTS RM B58/B59/B60/B61/B62	6
7	RCPT RM B51/B53 (PR)	15	1				1	15	LGTS RM B54/B63 & HOT/COLD WAIT (PR/N)	8
9	RCPT SPECT/CT (N)	15	1				1	15		10
11		15	1				1	60		12
13	SPACE	--	--				1	15		14
15	SPARE	40	1				1	15		16
17	SPACE	--	--				1	15		18
19	SPACE	--	--				1	15		20
21	SPACE	--	--				--	--	SPACE	22
23	SPACE	--	--				--	--	SPACE	24
25	SPACE	--	--				--	--	SPACE	26
27	SPACE	--	--				--	--	SPACE	28
29	SPACE	--	--				--	--	SPACE	30
31	SPACE	--	--				--	--	SPACE	32
33	SPACE	--	--				--	--	SPACE	34
35	SPACE	--	--				--	--	SPACE	36
37	SPACE	--	--				1	15	FAN FORCE HTR RM B149	38
39	SPACE	--	--				1	15	WATER HTR RM B43	40
41	SPACE	--	--				1	15	UNIT HTR RM B43	42
			Total Load:							
			Total Amps:							

Legend:

Load Classification	Connected Load	Demand Factor	Estimated Demand	Panel Totals	
				Total Conn. Load:	
				Total Est. Demand:	
				Total Conn.:	
				Total Est. Demand:	

Notes:

Branch Panel: BC

Location: X
Supply From: D0B1 RM 304
Mounting: Surface
Enclosure:

Volts: 120/208 Wye
Phases: 3
Wires: 4

A.I.C. Rating:
Mains Type:
Mains Rating: 225A
MCB Rating:

Notes:

CKT	Circuit Description	Trip	Poles	A	B	C	Poles	Trip	Circuit Description	CKT
1	RCPT RM B44	15	1				1	15	LGTS RM B43/B44/B45	2
3	RCPT RM B45	15	1				1	15	LGTS RM B46/B47/B49	4
5	RCPT RM B47	15	1				1	15	LGTS RM B50/B52&HOTWAIT/PREP/LAB (PR/N)	6
7	RCPT RM B49/B168	15	1				1	15	LGTS RM B51/B53&COLDWAIT/BMD/CR(PR/N)	8
9	RCPT RM B50	15	1				1	15	LGTS SPECT/CT & CONTROL ROOM (N)	10
11	RCPT RM B52 (PR)	15	1				1	15	LGTS RM B58/B62	12
13	RCPT RM B52 (PR)	15	1				1	15	LGTS EXTERIOR	14
15	RCPT RM B51	15	1				1	15	ADO WASHROOM & SPECT/CT (N)	16
17	RCPT RM B53	15	1				1	15	ADO COLD WAITING & CHANGE ROOM (N)	18
19	QUAD RCPT SPECT/CT (N)	15	1				1	15	B59 MICROWAVE	20
21	QUAD RCPT CONTROL ROOM (N)	15	1				1	15	ROMP OFFICE WORKSTATION	22
23	RCPT SPECT/CT & CONTROL ROOM (N)	15	1				1	15	HR PLUGS	24
25	RCPT HOT WAITING & COLD WAITING (N)	15	1				1	15	ADO MAIN ENTERANCE (N)	26
27	GFI RCPT PATIENT PREP & HOT LAB (N)	15	1				--	--	SPACE	28
29	RCPT BMD & CHANGE ROOM (N)	15	1				1	15	HES KITCHENETTE	30
31	C PATIENT LIFT (N)	15	1				1	15	HIS KITCHENETTE	32
33	RCPT BMD XRAY DEVICE (N)	20	1				1	20	HK RCPT SPECT/CT GENERAL SPACE (N)	34
35	RCPT RM B57/B62 (PR)	15	1				1	15	RCPT EXTERIOR	36
37	RCPT RM B62	15	1				1	15	RCPT GFI RM B61	38
39	RCPT RM B66	15	1				1	20	PHOTOCOPY	40
41	RCPT RM B60	15	1				1	15	ROMP PLUG	42
			Total Load:							
			Total Amps:							

Legend:

Load Classification	Connected Load	Demand Factor	Estimated Demand	Panel Totals	
				Total Conn. Load:	
				Total Est. Demand:	
				Total Conn.:	
				Total Est. Demand:	

Notes:

Branch Panel: PP-ME

Location: NEW ELECTRICAL ROOM
Supply From:
Mounting: Surface
Enclosure:

Volts: 120/208 Wye
Phases: 3
Wires: 4

A.I.C. Rating:
Mains Type:
Mains Rating: 100A
MCB Rating:

Notes:

CKT	Circuit Description	Trip	Poles	A	B	C	Poles	Trip	Circuit Description	CKT
1		15	1				1	15		2
3		15	1				1	15		4
5		15	1				1	15		6
7		15	1				1	15		8
9		15	1				1	15		10
11		15	1				1	15		12
13		15	1				1	15		14
15		15	1				1	15		16
17		15	1				1	15		18
19		15	1				1	15		20
21		15	1				1	15		22
23		15	1				1	15		24
25		15	1				1	15		26
27		15	1				1	15		28
29		15	1				1	15		30
31		15	1				1	15		32
33		15	1				1	15		34
35		15	1				1	15		36
37		15	1				1	15		38
39		15	1				1	15		40
41		15	1				1	15		42
43										44
45										48
47										
			Total Load:							
			Total Amps:							

Legend:

Load Classification	Connected Load	Demand Factor	Estimated Demand	Panel Totals	
				Total Conn. Load:	
				Total Est. Demand:	
				Total Conn.:	
				Total Est. Demand:	

Notes:

NO.	DATE	ISSUED
04	2026/01/06	ISSUED FOR TENDER
03	2025/12/09	ISSUED FOR PERMIT
02	2025/10/15	ISSUED FOR 50% CD
01	2025/06/17	ISSUED FOR 100% DD

NOTES

CONTRACTOR MUST CHECK AND VERIFY ALL DIMENSIONS SHOWN ON DRAWINGS WITH SITE CONDITIONS, PRIOR TO THE WORK AND NOTIFY THE ARCHITECT OF DIFFERENCES. AWAIT CLARIFICATION BEFORE CONTINUING.

DO NOT SCALE DRAWINGS.

ALL DRAWINGS, SPECIFICATIONS AND RELATED DOCUMENTS ARE THE COPYRIGHT PROPERTY OF THE ARCHITECT AND MUST BE RETURNED UPON REQUEST. REPRODUCTION OF DRAWINGS, SPECIFICATIONS AND RELATED DOCUMENTS IN PART OR IN WHOLE IS FORBIDDEN WITHOUT THE ARCHITECT'S WRITTEN PERMISSION.

THESE DRAWINGS ARE FOR PERMIT PURPOSES ONLY. THEY INDICATE DESIGN INTENT ONLY AND DO NOT FULLY DESCRIBE OR SPECIFY ALL CONDITIONS, MATERIAL OR ASSEMBLIES. REQUEST FURTHER INFORMATION FROM ARCHITECT PRIOR TO COMMENCING CONSTRUCTION AS REQUIRED.

ARCHITECT:
CARTER AI
DAVID CARTER ARCHITECTS INC.
688 Richmond St W, Suite 303 Toronto ON M6J 1C5 | 416 977 6300

MECHANICAL AND ELECTRICAL ENGINEERING:
QUASAR
250 Rowntree Dairy Road Woodbridge, ON L4L 9J7

CLIENT:
COLLINGWOOD G&M HOSPITAL

NUCLEAR MEDICINE
SPECT/CT CAMERA
COLLINGWOOD GENERAL AND MARINE HOSPITAL
459 HUME STREET, COLLINGWOOD ON

PROJECT NORTH
TRUE NORTH

ELECTRICAL PANEL SCHEDULE - NEW WORK

ENTERED: JM
CHECKED: JE
DATE: 2025/12/09
PROJECT NO.
HC-24-173

DRAWING NO.
E902